Prices effective January 4, 2022

Nemschoff® Valor™ Family

Introduction	**page 2**
Nemschoff® Valor™ Family	**3**
Healthcare Seating	5
Healthcare Tables	27
Indices	**31**
By Name	31
By Number	33
Appendices	
20-Day or Less/Assigned Lead-Time Order Information - Healthcare	
Customer's Own Material/Customer's Own Leather Order Information-Seating	
Proprietary Textiles Application Chart-Seating	
Proprietary Textile Colors-Seating	
Maharam® Application Chart-Seating	
Maharam Colors-Seating	

For the latest materials information, refer to the Materials pages on HermanMiller.com.

Introduction

A Note on the Organization of This Book

There are a few signals that will help you understand the organization of this book. Once you know them, you should be able to find your way around easily.

Like a newspaper, this book is formatted with columns of text and illustrations that run vertically.

Information wraps from one column to the next and continues for as many pages as it needs to.

Black bars are clues.

A black bar at the top of a page signals the start of information about a product.

This information is divided into two sections, each signaled by a black bar. Product Information includes a description, additional notes, and dimensional drawings. Specification Information, which always begins at the top of a column, includes a series of steps. Each step represents a decision you need to make in order to complete your product number. Steps must be followed sequentially. The number of pages needed to complete information on a product varies; some will be complete in one page; others may fill three or four pages. Just continue going through the steps until you run into the next product, signaled by the black bar at the top of the page.

Black tabs running along the outside edge of the page help you locate what section you are in or what section you want to go to. You can thumb forwards or backwards to find a section; tabs and text appear on both sides of the page.

The additional pages in the back of the book include the appendices and indices. They are signaled by a long black bar running along the outside edge of the page.

The index is presented two ways.

The first index is in alphabetical order by product name. It can be helpful if you are new to the products and numbering scheme or if you are looking for a type of product, such as work chair or round table.
The second index is by product number. It lists, in alphanumeric order, the base product number, typically a five-digit number.

General Information

This book is effective January 4, 2022, subject to change without notice. Products may be purchased from authorized Herman Miller dealers who will quote prices upon request. For more information about our products and services or to see a list of dealers, visit www.HermanMiller.com.

All prices are list prices. Additional services, such as planning services, design, storage, and installation, are not included and must be added to these prices when the additional services are requested.

Illustrations, specifications, and prices are based on the latest information at the time of publication. The right is reserved to make changes at any time without notice in prices, fabrics, finishes, materials, specifications, and models, and also to discontinue models and finishes.

Dimensions shown in the drawings are engineering drawing dimensions rounded up to the nearest 1/8". Product is shipped set up or knocked down. Products that include "Shipped knocked down" in the description require some assembly. If this statement does not appear in the description, the product is shipped assembled.

Service problems are normally handled by a Herman Miller authorized dealer. Where this cannot be accomplished on a local level, service problems should be referred to the Customer Care Representative for your region, Herman Miller, Inc., Zeeland, Michigan 49464.

20-Day or Less/Assigned Lead-Time Shipments

All products and options in this price book not designated by an Assigned Program icon [A] will ship in **20 business days or less** after being acknowledged by Herman Miller.

Products and options designated by an [A] are on the assigned lead-time program and may ship in 20 days, less than 20 days, or more than 20 days from order acknowledgement.

Healthcare Seating

Healthcare Tables

Valor™ Side Chair HV110.

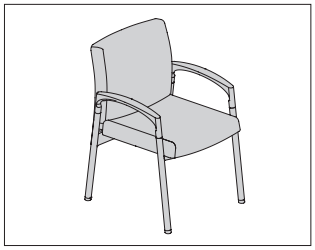

Product Information

Description

This side chair has an upholstered seat and upholstered back. 4-leg base has a choice of standard or wallsaver glides. Arm caps are available in black or pewter.

Notes

Chair does not stack.

Customer's Own Material (COM) requires 1.59 yards for the one fabric (1F) configuration. For the multiple fabrics (MF) configuration, seat requires 0.89 yards and back requires 0.81 yards. See Order Information in appendices.

Dimensions

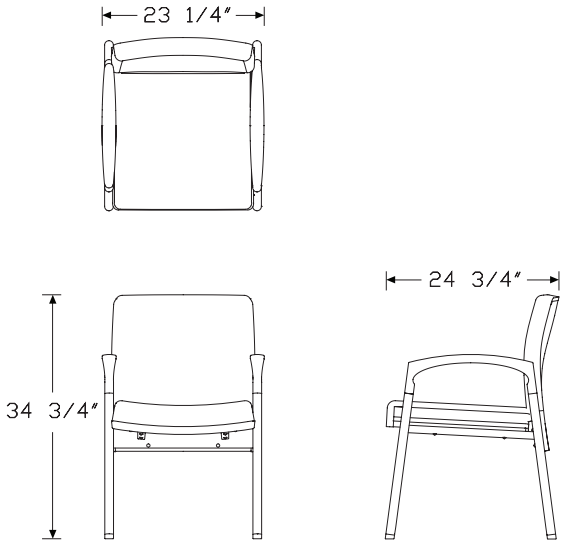

Specification Information

Step 1.

HV1	A	

Step 2. Size

10.	23.25" wide A	+$1036

Step 3. Upholstered Cushion Covers

S	standard covers A	+$0
P	removable covers A	+$112

Step 4. Fabric Configuration

1F	one fabric A	+$0
MF	multiple fabrics A	+$118

Step 5. Arm Cap Detail

R	urethane arm caps A	+$0

Step 6. Arm Cap Finish

BK	black A	+$0
PW	pewter A	+$0

Step 7. Glides

STD	standard glides A	+$0
WSR	wallsaver glides A	+$0

Step 8. Moisture Barrier Option

MBN	no moisture barrier A	+$0
MBB	moisture barrier back only A	+$74
MBS	moisture barrier seat only A	+$74
MBX	moisture barrier seat and back A	+$149

Step 9. Paint Type

X	textured paint on smooth steel A	+$0
S	smooth paint on smooth steel A	+$0

Step 10. Powdercoat Frame Finish

For textured paint on smooth steel (X)

G1	graphite A	+$0
MS	metallic silver A	+$0
XT	titanium A	+$0

For smooth paint on smooth steel (S)

BK	black A	+$0
MS	metallic silver A	+$0
XT	titanium A	+$0

Step 11.	
Fabric	
For one fabric (1F)	
Price Category 1	+$0
Price Category 2	+$16
Price Category 3	+$33
Price Category 4	+$62
Price Category 5	+$104
Price Category 7	+$0
Price Category 8	+$258
Price Category 9	+$323
Price Category 10	+$389
Price Category B	+$58
Price Category C	+$80
Price Category D	+$101
Price Category E	+$121
Price Category F	+$156
Price Category G	+$203
Price Category H	+$246
Price Category I	+$290
Price Category L	+$418

Seat Fabric	
For multiple fabrics (MF)	
Price Category 1	+$0
Price Category 2	+$9
Price Category 3	+$17
Price Category 4	+$33
Price Category 5	+$55
Price Category 7	+$105
Price Category 8	+$137
Price Category 9	+$172
Price Category 10	+$207
Price Category B	+$31
Price Category C	+$43
Price Category D	+$54
Price Category E	+$64
Price Category F	+$84
Price Category G	+$108
Price Category H	+$132
Price Category I	+$154
Price Category J	+$177
Price Category L	+$223

Step 12. Back Fabric	
For multiple fabrics (MF)	
Price Category 10	+$182
Price Category 1	+$0
Price Category 2	+$8
Price Category 3	+$15
Price Category 4	+$29
Price Category 5	+$49
Price Category 7	+$92
Price Category 8	+$120
Price Category 9	+$151
Price Category B	+$28
Price Category C	+$38
Price Category D	+$47
Price Category E	+$57
Price Category F	+$73
Price Category G	+$95
Price Category H	+$115
Price Category I	+$135
Price Category L	+$195

Valor™ Plus Chair, 33" Wide HV1OB3

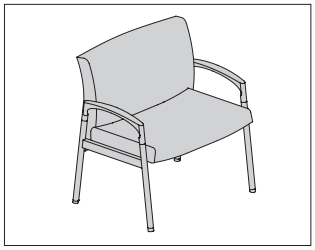

Product Information

Description

This plus chair has an upholstered seat and upholstered back. 4-leg base has a choice of standard or wallsaver glides. Arm caps are available in black or pewter.

Notes

Chair does not stack.

Customer's Own Material (COM) requires 2.43 yards for the one fabric (1F) configuration. For the multiple fabrics (MF) configuration, seat requires 0.86 yards and back requires 1.47 yards. See Order Information in appendices.

Dimensions

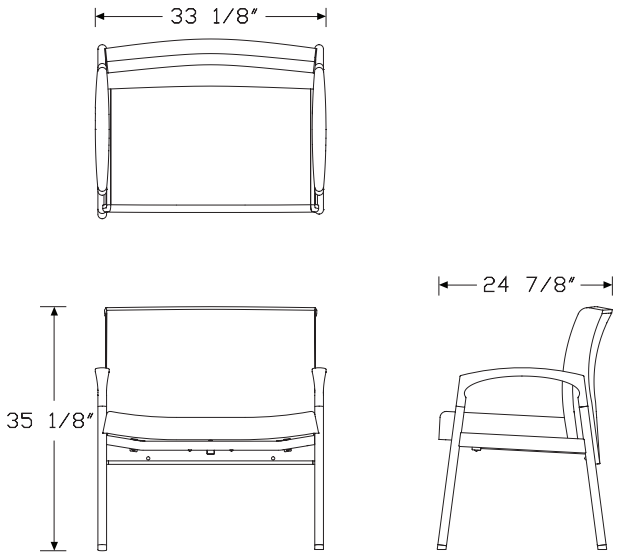

Specification Information

Step 1.

HV1 A

Step 2. Size

OB30.	33.25" wide A	+$1448

Step 3. Fabric Configuration

1F	one fabric A	+$0
MF	multiple fabrics A	+$118

Step 4. Arm Cap Detail

R	urethane arm caps A	+$0

Step 5. Arm Cap Finish

BK	black A	+$0
PW	pewter A	+$0

Step 6. Glides

STD	standard glides A	+$0
WSR	wallsaver glides A	+$0

Step 7. Moisture Barrier Option

MBN	no moisture barrier A	+$0
MBB	moisture barrier back only A	+$74
MBS	moisture barrier seat only A	+$74
MBX	moisture barrier seat and back A	+$149

Step 8. Paint Type

X	textured paint on smooth steel A	+$0
S	smooth paint on smooth steel A	+$0

Step 9. Powdercoat Frame Finish

For textured paint on smooth steel (X)

G1	graphite A	+$0
MS	metallic silver A	+$0
XT	titanium A	+$0

For smooth paint on smooth steel (S)

BK	black A	+$0
MS	metallic silver A	+$0
XT	titanium A	+$0

Valor™ Plus Chair, 33" Wide

continued

Step 10.	
Fabric	
For one fabric (1F)	
Price Category 1	+$0
Price Category 2	+$23
Price Category 3	+$46
Price Category 4	+$87
Price Category 5	+$145
Price Category 7	+$0
Price Category 8	+$0
Price Category 9	+$451
Price Category 10	+$543
Price Category B	+$81
Price Category C	+$111
Price Category D	+$141
Price Category E	+$169
Price Category F	+$218
Price Category G	+$283
Price Category H	+$344
Price Category I	+$404
Price Category L	+$584

Seat Fabric	
For multiple fabrics (MF)	
Price Category 1	+$0
Price Category 2	+$9
Price Category 3	+$17
Price Category 4	+$33
Price Category 5	+$55
Price Category 7	+$105
Price Category 8	+$0
Price Category 9	+$172
Price Category 10	+$207
Price Category B	+$31
Price Category C	+$43
Price Category D	+$54
Price Category E	+$64
Price Category F	+$84
Price Category G	+$108
Price Category H	+$132
Price Category I	+$154
Price Category J	+$177
Price Category L	+$223

Step 11. Back Fabric	
For multiple fabrics (MF)	
Price Category 1	+$0
Price Category 2	+$14
Price Category 3	+$29
Price Category 4	+$53
Price Category 5	+$90
Price Category 7	+$169
Price Category 8	+$0
Price Category 9	+$279
Price Category 10	+$335
Price Category B	+$50
Price Category C	+$68
Price Category D	+$87
Price Category E	+$104
Price Category F	+$135
Price Category G	+$174
Price Category H	+$212
Price Category I	+$250
Price Category L	+$361

Valor™ Plus Chair, 43" Wide HV1OB4

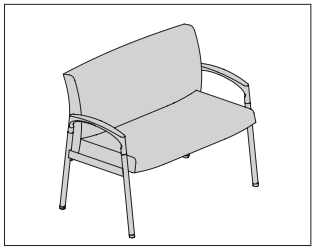

Product Information

Description

This plus chair has an upholstered seat and upholstered back. 4-leg base has a choice of standard or wallsaver glides. Arm caps are available in black or pewter.

Notes

Chair does not stack.

Customer's Own Material (COM) requires 2.43 yards for the one fabric (1F) configuration. For the multiple fabrics (MF) configuration, seat requires 0.86 yards and back requires 1.47 yards. See Order Information in appendices.

Dimensions

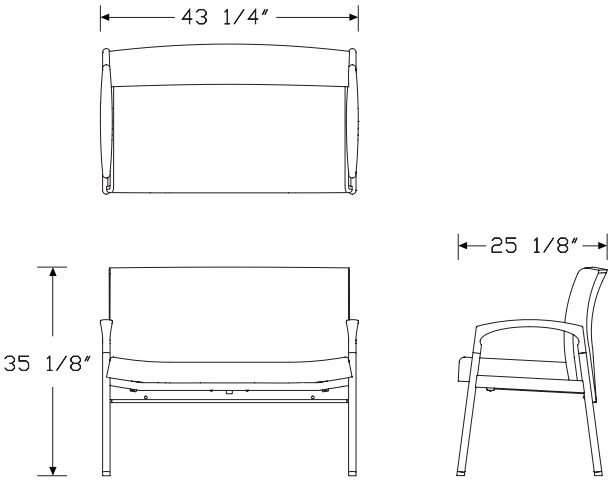

Specification Information

Step 1.

HV1 A

Step 2. Size

OB40.	43.25″ wide A	+$1677

Step 3. Fabric Configuration

1F	one fabric A	+$0
MF	multiple fabrics A	+$118

Step 4. Arm Cap Detail

R	urethane arm caps A	+$0

Step 5. Arm Cap Finish

BK	black A	+$0
PW	pewter A	+$0

Step 6. Glides

STD	standard glides A	+$0
WSR	wallsaver glides A	+$0

Step 7. Moisture Barrier Option

MBN	no moisture barrier A	+$0
MBB	moisture barrier back only A	+$74
MBS	moisture barrier seat only A	+$74
MBX	moisture barrier seat and back A	+$149

Step 8. Paint Type

X	textured paint on smooth steel A	+$0
S	smooth paint on smooth steel A	+$0

Step 9. Powdercoat Frame Finish

For textured paint on smooth steel (X)

G1	graphite A	+$0
MS	metallic silver A	+$0
XT	titanium A	+$0

For smooth paint on smooth steel (S)

BK	black A	+$0
MS	metallic silver A	+$0
XT	titanium A	+$0

Valor™ Plus Chair, 43" Wide

continued

Step 10.	
Fabric	
For one fabric (1F)	
Price Category 1	+$0
Price Category 2	+$23
Price Category 3	+$46
Price Category 4	+$87
Price Category 5	+$145
Price Category 7	+$0
Price Category 8	+$360
Price Category 9	+$451
Price Category 10	+$543
Price Category B	+$81
Price Category C	+$111
Price Category D	+$141
Price Category E	+$169
Price Category F	+$218
Price Category G	+$283
Price Category H	+$344
Price Category I	+$404
Price Category L	+$584

Seat Fabric	
For multiple fabrics (MF)	
Price Category 1	+$0
Price Category 2	+$9
Price Category 3	+$17
Price Category 4	+$33
Price Category 5	+$55
Price Category 7	+$105
Price Category 8	+$137
Price Category 9	+$172
Price Category 10	+$207
Price Category B	+$31
Price Category C	+$43
Price Category D	+$54
Price Category E	+$64
Price Category F	+$84
Price Category G	+$108
Price Category H	+$132
Price Category I	+$154
Price Category J	+$177
Price Category L	+$223

Step 11. Back Fabric	
For multiple fabrics (MF)	
Price Category 1	+$0
Price Category 2	+$14
Price Category 3	+$29
Price Category 4	+$53
Price Category 5	+$90
Price Category 7	+$169
Price Category 8	+$222
Price Category 9	+$279
Price Category 10	+$335
Price Category B	+$50
Price Category C	+$68
Price Category D	+$87
Price Category E	+$104
Price Category F	+$135
Price Category G	+$174
Price Category H	+$212
Price Category I	+$250
Price Category L	+$361

Valor™ Two-Seat Multiple Seating, No Center Arm, No Center Leg HV120.

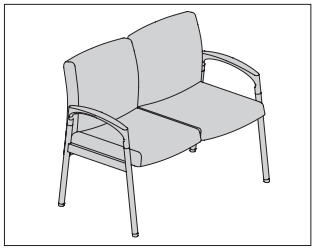

Product Information

Description

This 2-seat multiple seat has an upholstered seat and upholstered back. 4-leg base has a choice of standard or wallsaver glides. Arm caps are available in black or pewter.

Notes

Multiple seating does not stack.

Customer's Own Material (COM) requires 3.18 yards for the one fabric (1F) configuration. For the multiple fabrics (MF) configuration, seat requires 1.78 yards and back requires 1.61 yards. See Order Information in appendices.

Dimensions

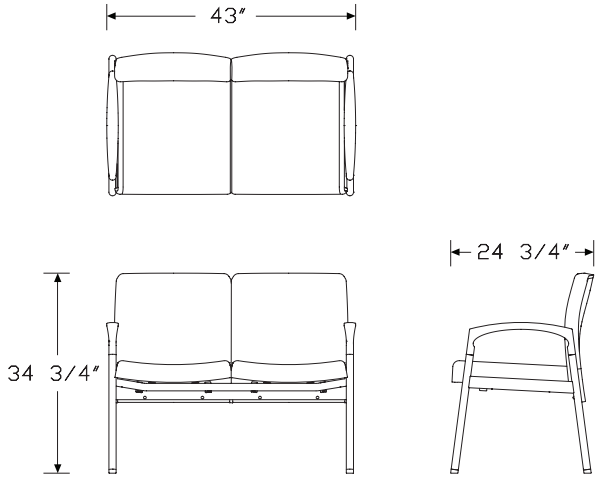

Specification Information

Step 1.

HV1 A

Step 2. Size

20.	two-seat multiple seating, 43.25″ wide, no center arm, no center leg A	+$1958

Step 3. Upholstered Cushion Covers

S	standard covers A	+$0
P	removable covers A	+$204

Step 4. Fabric Configuration

1F	one fabric A	+$0
MF	multiple fabrics A	+$118

Step 5. Arm Cap Detail

R	urethane arm caps A	+$0

Step 6. Arm Cap Finish

BK	black A	+$0
PW	pewter A	+$0

Step 7. Glides

STD	standard glides A	+$0
WSR	wallsaver glides A	+$0

Step 8. Moisture Barrier Option

MBN	no moisture barrier A	+$0
MBB	moisture barrier back only A	+$149
MBS	moisture barrier seat only A	+$149
MBX	moisture barrier seat and back A	+$298

Step 9. Paint Type

X	textured paint on smooth steel A	+$0
S	smooth paint on smooth steel A	+$0

Step 10. Powdercoat Frame Finish

For textured paint on smooth steel (X)

G1	graphite A	+$0
MS	metallic silver A	+$0
XT	titanium A	+$0

Valor™ Two-Seat Multiple Seating, No Center Arm, No Center Leg

continued

For smooth paint on smooth steel (S)		
BK	black A	+$0
MS	metallic silver A	+$0
XT	titanium A	+$0

Step 11.

Fabric	
For one fabric (1F)	
Price Category 10	+$778
Price Category 1	+$0
Price Category 2	+$34
Price Category 3	+$65
Price Category 4	+$124
Price Category 5	+$208
Price Category 7	+$0
Price Category 8	+$516
Price Category 9	+$647
Price Category B	+$116
Price Category C	+$159
Price Category D	+$201
Price Category E	+$243
Price Category F	+$313
Price Category G	+$406
Price Category H	+$493
Price Category I	+$579
Price Category L	+$837

Seat Fabric	
For multiple fabrics (MF)	
Price Category 10	+$415
Price Category 1	+$0
Price Category 2	+$17
Price Category 3	+$35
Price Category 4	+$66
Price Category 5	+$111
Price Category 7	+$209
Price Category 8	+$275
Price Category 9	+$345
Price Category B	+$62
Price Category C	+$85
Price Category D	+$107
Price Category E	+$130
Price Category F	+$166
Price Category G	+$216
Price Category H	+$262
Price Category I	+$308
Price Category J	+$354
Price Category L	+$446

Step 12. Back Fabric	
For multiple fabrics (MF)	
Price Category 10	+$363
Price Category 1	+$0
Price Category 2	+$15
Price Category 3	+$31
Price Category 4	+$58
Price Category 5	+$97
Price Category 7	+$183
Price Category 8	+$241
Price Category 9	+$302
Price Category B	+$54
Price Category C	+$74
Price Category D	+$94
Price Category E	+$113
Price Category F	+$146
Price Category G	+$190
Price Category H	+$231
Price Category I	+$270
Price Category L	+$391

Valor™ Two-Seat Multiple Seating with Intervening Arm and Leg HV122.

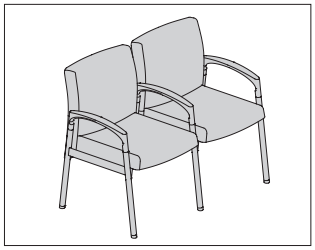

Product Information

Description

This 2-seat multiple seat has an upholstered seat and upholstered back. 6-leg base has a choice of standard or wallsaver glides. Arm caps are available in black or pewter.

Notes

Multiple seating does not stack.

Customer's Own Material (COM) requires 3.18 yards for the one fabric (1F) configuration. For the multiple fabrics (MF) configuration, seat requires 1.78 yards and back requires 1.61 yards. See Order Information in appendices.

Dimensions

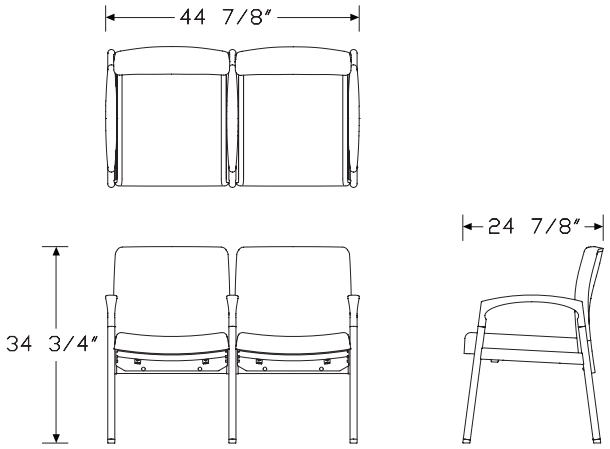

Specification Information

Step 1.

HV1 A

Step 2. Size

22.	two-seat multiple seating, 45″ wide, intervening arm and leg A	+$2096

Step 3. Upholstered Cushion Covers

S	standard covers A	+$0
P	removable covers A	+$222

Step 4. Fabric Configuration

1F	one fabric A	+$0
MF	multiple fabrics A	+$118

Step 5. Arm Cap Detail

R	urethane arm caps A	+$0

Step 6. Arm Cap Finish

BK	black A	+$0
PW	pewter A	+$0

Step 7. Glides

STD	standard glides A	+$0
WSR	wallsaver glides A	+$0

Step 8. Moisture Barrier Option

MBN	no moisture barrier A	+$0
MBB	moisture barrier back only A	+$149
MBS	moisture barrier seat only A	+$149
MBX	moisture barrier seat and back A	+$298

Step 9. Paint Type

X	textured paint on smooth steel A	+$0
S	smooth paint on smooth steel A	+$0

Step 10. Powdercoat Frame Finish

For textured paint on smooth steel (X)

G1	graphite A	+$0
MS	metallic silver A	+$0
XT	titanium A	+$0

Valor™ Two-Seat Multiple Seating with Intervening Arm and Leg

continued

For smooth paint on smooth steel (S)		
BK	black A	+$0
MS	metallic silver A	+$0
XT	titanium A	+$0

Step 11.

Fabric

For one fabric (1F)

Price Category 10	+$778
Price Category 1	+$0
Price Category 2	+$34
Price Category 3	+$65
Price Category 4	+$124
Price Category 5	+$208
Price Category 7	+$0
Price Category 8	+$516
Price Category 9	+$647
Price Category B	+$116
Price Category C	+$159
Price Category D	+$201
Price Category E	+$243
Price Category F	+$313
Price Category G	+$406
Price Category H	+$493
Price Category I	+$579
Price Category L	+$837

Seat Fabric

For multiple fabrics (MF)

Price Category 10	+$415
Price Category 1	+$0
Price Category 2	+$17
Price Category 3	+$35
Price Category 4	+$66
Price Category 5	+$111
Price Category 7	+$209
Price Category 8	+$275
Price Category 9	+$345
Price Category B	+$62
Price Category C	+$85
Price Category D	+$107
Price Category E	+$130
Price Category F	+$166
Price Category G	+$216
Price Category H	+$262
Price Category I	+$308
Price Category J	+$354
Price Category L	+$446

Step 12. Back Fabric

For multiple fabrics (MF)

Price Category 10	+$363
Price Category 1	+$0
Price Category 2	+$15
Price Category 3	+$31
Price Category 4	+$58
Price Category 5	+$97
Price Category 7	+$183
Price Category 8	+$241
Price Category 9	+$302
Price Category B	+$54
Price Category C	+$74
Price Category D	+$94
Price Category E	+$113
Price Category F	+$146
Price Category G	+$190
Price Category H	+$231
Price Category I	+$270
Price Category L	+$391

Valor™ Three-Seat Multiple Seating, No Center Arm, No Center Leg

HV130.

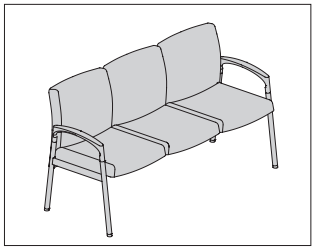

Product Information

Description

This 3-seat multiple seat has an upholstered seat and upholstered back. 4-leg base has a choice of standard or wallsaver glides. Arm caps are available in black or pewter.

Notes

Multiple seating does not stack.

Customer's Own Material (COM) requires 4.77 yards for the one fabric (1F) configuration. For the multiple fabrics (MF) configuration, seat requires 2.67 yards and back requires 2.42 yards. See Order Information in appendices.

Dimensions

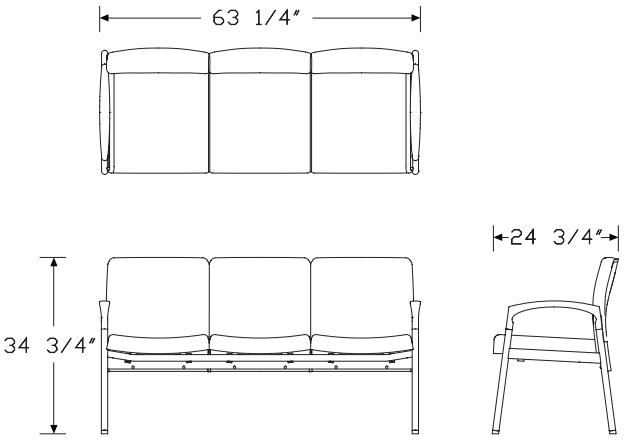

Specification Information

Step 1.

HV1 A

Step 2. Size

30.	three-seat multiple seating, 63.25″ wide, no center arm, no center leg A	+$2688

Step 3. Upholstered Cushion Covers

S	standard covers A	+$0
P	removable covers A	+$279

Step 4. Fabric Configuration

1F	one fabric A	+$0
MF	multiple fabrics A	+$118

Step 5. Arm Cap Detail

R	urethane arm caps A	+$0

Step 6. Arm Cap Finish

BK	black A	+$0
PW	pewter A	+$0

Step 7. Glides

STD	standard glides A	+$0
WSR	wallsaver glides A	+$0

Step 8. Moisture Barrier Option

MBN	no moisture barrier A	+$0
MBB	moisture barrier back only A	+$223
MBS	moisture barrier seat only A	+$223
MBX	moisture barrier seat and back A	+$447

Step 9. Paint Type

X	textured paint on smooth steel A	+$0
S	smooth paint on smooth steel A	+$0

Step 10. Powdercoat Frame Finish

For textured paint on smooth steel (X)

G1	graphite A	+$0
MS	metallic silver A	+$0
XT	titanium A	+$0

Valor™ Three-Seat Multiple Seating, No Center Arm, No Center Leg *continued*

For smooth paint on smooth steel (S)		
BK	black A	+$0
MS	metallic silver A	+$0
XT	titanium A	+$0

Step 11.

Fabric	
For one fabric (1F)	
Price Category 10	+$1167
Price Category 1	+$0
Price Category 2	+$50
Price Category 3	+$98
Price Category 4	+$186
Price Category 5	+$312
Price Category 7	+$0
Price Category 8	+$774
Price Category 9	+$970
Price Category B	+$173
Price Category C	+$239
Price Category D	+$302
Price Category E	+$364
Price Category F	+$469
Price Category G	+$609
Price Category H	+$739
Price Category I	+$868
Price Category L	+$1255

Seat Fabric	
For multiple fabrics (MF)	
Price Category 10	+$622
Price Category 1	+$0
Price Category 2	+$27
Price Category 3	+$52
Price Category 4	+$99
Price Category 5	+$166
Price Category 7	+$314
Price Category 8	+$412
Price Category 9	+$517
Price Category B	+$93
Price Category C	+$128
Price Category D	+$161
Price Category E	+$194
Price Category F	+$250
Price Category G	+$324
Price Category H	+$394
Price Category I	+$463
Price Category J	+$531
Price Category L	+$669

Step 12. Back Fabric	
For multiple fabrics (MF)	
Price Category 10	+$545
Price Category 1	+$0
Price Category 2	+$23
Price Category 3	+$46
Price Category 4	+$87
Price Category 5	+$146
Price Category 7	+$275
Price Category 8	+$361
Price Category 9	+$453
Price Category B	+$82
Price Category C	+$112
Price Category D	+$141
Price Category E	+$170
Price Category F	+$215
Price Category G	+$285
Price Category H	+$345
Price Category I	+$405
Price Category L	+$586

Valor™ Three-Seat Multiple Seating with Intervening Arm and Leg

HV133.

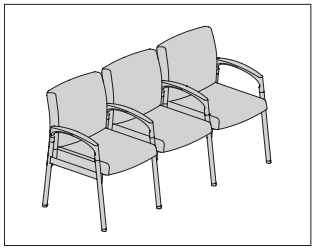

Product Information

Description

This 3-seat multiple seat has an upholstered seat and upholstered back. 8-leg base has a choice of standard or wallsaver glides. Arm caps are available in black or pewter.

Notes

Multiple seating does not stack.

Customer's Own Material (COM) requires 4.77 yards for the one fabric (1F) configuration. For the multiple fabrics (MF) configuration, seat requires 2.67 yards and back requires 2.42 yards. See Order Information in appendices.

Dimensions

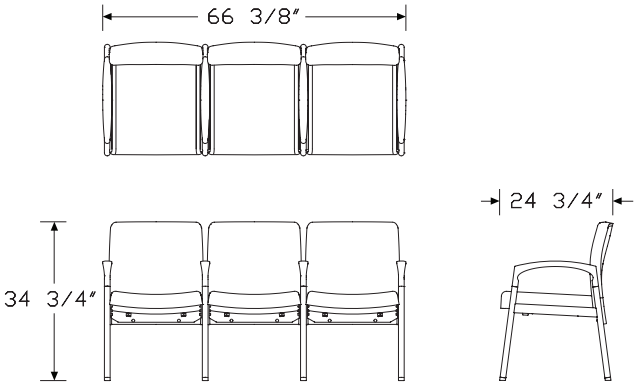

Specification Information

Step 1.

HV1 A

Step 2. Size

33.	three-seat multiple seating, 66.5″ wide, intervening arm and leg A	+$3034

Step 3. Upholstered Cushion Covers

S	standard covers A	+$0
P	removable covers A	+$310

Step 4. Fabric Configuration

1F	one fabric A	+$0
MF	multiple fabrics A	+$118

Step 5. Arm Cap Detail

R	urethane arm caps A	+$0

Step 6. Arm Cap Finish

BK	black A	+$0
PW	pewter A	+$0

Step 7. Glides

STD	standard glides A	+$0
WSR	wallsaver glides A	+$0

Step 8. Moisture Barrier Option

MBN	no moisture barrier A	+$0
MBB	moisture barrier back only A	+$223
MBS	moisture barrier seat only A	+$223
MBX	moisture barrier seat and back A	+$447

Step 9. Paint Type

X	textured paint on smooth steel A	+$0
S	smooth paint on smooth steel A	+$0

Step 10. Powdercoat Frame Finish

For textured paint on smooth steel (X)

G1	graphite A	+$0
MS	metallic silver A	+$0
XT	titanium A	+$0

Valor™ Three-Seat Multiple Seating with Intervening Arm and Leg *continued*

For smooth paint on smooth steel (S)		
BK	black A	+$0
MS	metallic silver A	+$0
XT	titanium A	+$0

Step 11.

Fabric	
For one fabric (1F)	
Price Category 10	+$1167
Price Category 1	+$0
Price Category 2	+$50
Price Category 3	+$98
Price Category 4	+$186
Price Category 5	+$312
Price Category 7	+$0
Price Category 8	+$774
Price Category 9	+$970
Price Category B	+$173
Price Category C	+$239
Price Category D	+$302
Price Category E	+$364
Price Category F	+$469
Price Category G	+$609
Price Category H	+$739
Price Category I	+$868
Price Category L	+$1255

Seat Fabric	
For multiple fabrics (MF)	
Price Category 10	+$622
Price Category 1	+$0
Price Category 2	+$27
Price Category 3	+$52
Price Category 4	+$99
Price Category 5	+$166
Price Category 7	+$314
Price Category 8	+$412
Price Category 9	+$517
Price Category B	+$93
Price Category C	+$128
Price Category D	+$161
Price Category E	+$194
Price Category F	+$250
Price Category G	+$324
Price Category H	+$394
Price Category I	+$463
Price Category J	+$531
Price Category L	+$669

Step 12. Back Fabric	
For multiple fabrics (MF)	
Price Category 10	+$545
Price Category 1	+$0
Price Category 2	+$23
Price Category 3	+$46
Price Category 4	+$87
Price Category 5	+$146
Price Category 7	+$275
Price Category 8	+$361
Price Category 9	+$453
Price Category B	+$82
Price Category C	+$112
Price Category D	+$141
Price Category E	+$170
Price Category F	+$219
Price Category G	+$285
Price Category H	+$345
Price Category I	+$405
Price Category L	+$586

Valor™ Stacking Chair, Armless HV191.

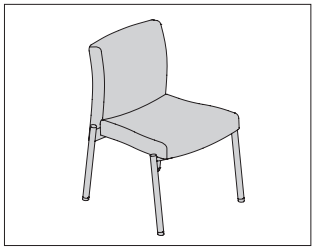

Product Information

Description

This stacking chair has an upholstered seat and upholstered back. 4-leg base has a choice of standard or wallsaver glides.

Notes

Chair can stack up to 3 high on the floor.

Customer's Own Material (COM) requires 1.53 yards for the one fabric (1F) configuration. For the multiple fabrics (MF) configuration, seat requires 0.89 yards and back requires 0.78 yards. See Order Information in appendices.

Dimensions

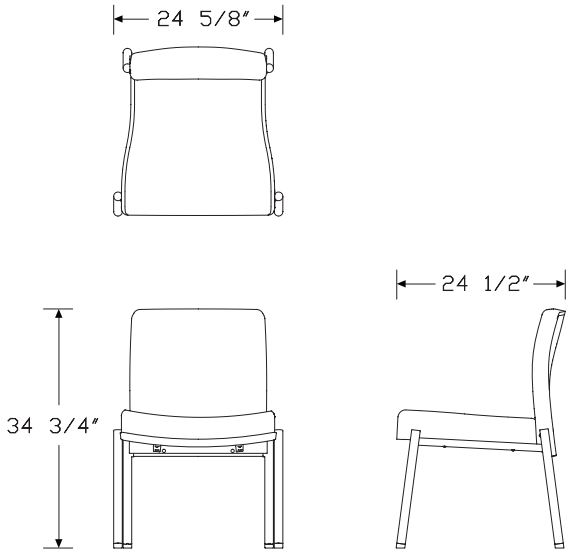

Specification Information

Step 1.

HV1 A

Step 2. Size		
91.	24.75" wide A	+$970

Step 3. Upholstered Cushion Covers		
S	standard covers A	+$0
P	removable covers A	+$103

Step 4. Fabric Configuration		
1F	one fabric A	+$0
MF	multiple fabrics A	+$118

Step 5. Glides		
STD	standard glides A	+$0
WSR	wallsaver glides A	+$0

Step 6. Moisture Barrier Option		
MBN	no moisture barrier A	+$0
MBB	moisture barrier back only A	+$74
MBS	moisture barrier seat only A	+$74
MBX	moisture barrier seat and back A	+$149

Step 7. Paint Type		
X	textured paint on smooth steel A	+$0
S	smooth paint on smooth steel A	+$0

Step 8. Powdercoat Frame Finish

For textured paint on smooth steel (X)

G1	graphite A	+$0
MS	metallic silver A	+$0
XT	titanium A	+$0

For smooth paint on smooth steel (S)

BK	black A	+$0
MS	metallic silver A	+$0
XT	titanium A	+$0

Valor™ Stacking Chair, Armless

continued

Step 9.	
Fabric	
For one fabric (1F)	
Price Category 10	+$382
Price Category 1	+$0
Price Category 2	+$16
Price Category 3	+$32
Price Category 4	+$61
Price Category 5	+$102
Price Category 7	+$0
Price Category 8	+$253
Price Category 9	+$318
Price Category B	+$57
Price Category C	+$79
Price Category D	+$99
Price Category E	+$119
Price Category F	+$154
Price Category G	+$199
Price Category H	+$242
Price Category I	+$285
Price Category L	+$411

Seat Fabric	
For multiple fabrics (MF)	
Price Category 10	+$207
Price Category 1	+$0
Price Category 2	+$9
Price Category 3	+$17
Price Category 4	+$33
Price Category 5	+$55
Price Category 7	+$105
Price Category 8	+$137
Price Category 9	+$172
Price Category B	+$31
Price Category C	+$43
Price Category D	+$54
Price Category E	+$64
Price Category F	+$84
Price Category G	+$108
Price Category H	+$132
Price Category I	+$154
Price Category J	+$177
Price Category L	+$223

Step 10. Back Fabric	
For multiple fabrics (MF)	
Price Category 10	+$175
Price Category 1	+$0
Price Category 2	+$7
Price Category 3	+$14
Price Category 4	+$28
Price Category 5	+$47
Price Category 7	+$88
Price Category 8	+$116
Price Category 9	+$145
Price Category B	+$27
Price Category C	+$36
Price Category D	+$45
Price Category E	+$54
Price Category F	+$70
Price Category G	+$91
Price Category H	+$110
Price Category I	+$130
Price Category L	+$188

Valor™ Stacking Chair with Arms HV192.

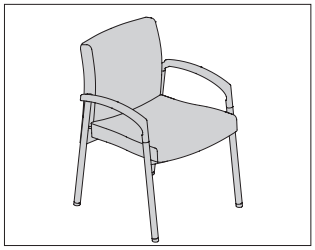

Product Information

Description

This stacking chair has an upholstered seat and upholstered back. 4-leg base has a choice of standard or wallsaver glides. Arm caps are available in black or pewter.

Notes

Chair can stack up to 3 high on the floor.

Customer's Own Material (COM) requires 1.53 yards for the one fabric (1F) configuration. For the multiple fabrics (MF) configuration, seat requires 0.89 yards and back requires 0.78 yards. See Order Information in appendices.

Dimensions

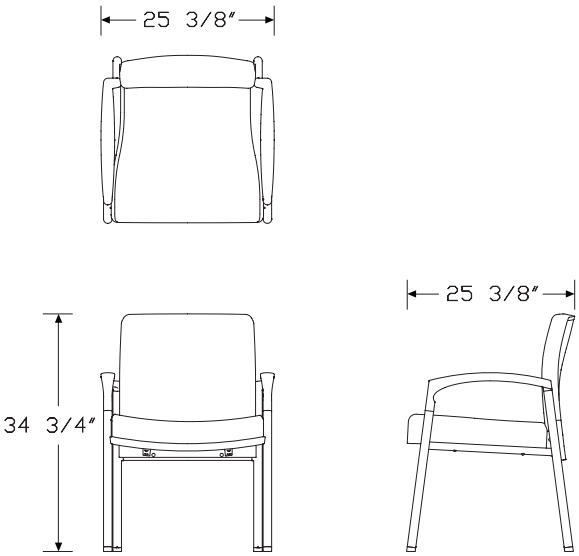

Specification Information

Step 1.

HV1 A

Step 2. Size

92.	25.50″ wide A	+$1072

Step 3. Upholstered Cushion Covers

S	standard covers A	+$0
P	removable covers A	+$113

Step 4. Fabric Configuration

1F	one fabric A	+$0
MF	multiple fabrics A	+$118

Step 5. Arm Cap Detail

R	urethane arm caps A	+$0

Step 6. Arm Cap Finish

BK	black A	+$0
PW	pewter A	+$0

Step 7. Glides

STD	standard glides A	+$0
WSR	wallsaver glides A	+$0

Step 8. Moisture Barrier Option

MBN	no moisture barrier A	+$0
MBB	moisture barrier back only A	+$74
MBS	moisture barrier seat only A	+$74
MBX	moisture barrier seat and back A	+$149

Step 9. Paint Type

X	textured paint on smooth steel A	+$0
S	smooth paint on smooth steel A	+$0

Step 10. Powdercoat Frame Finish

For textured paint on smooth steel (X)

G1	graphite A	+$0
MS	metallic silver A	+$0
XT	titanium A	+$0

For smooth paint on smooth steel (S)

BK	black A	+$0
MS	metallic silver A	+$0
XT	titanium A	+$0

Valor™ Stacking Chair with Arms

continued

Step 11.	
Fabric	
For one fabric (1F)	
Price Category 10	+$382
Price Category 1	+$0
Price Category 2	+$16
Price Category 3	+$32
Price Category 4	+$61
Price Category 5	+$102
Price Category 7	+$0
Price Category 8	+$253
Price Category 9	+$318
Price Category B	+$57
Price Category C	+$79
Price Category D	+$99
Price Category E	+$119
Price Category F	+$154
Price Category G	+$199
Price Category H	+$242
Price Category I	+$285
Price Category L	+$411

Seat Fabric	
For multiple fabrics (MF)	
Price Category 10	+$207
Price Category 1	+$0
Price Category 2	+$9
Price Category 3	+$17
Price Category 4	+$33
Price Category 5	+$55
Price Category 7	+$105
Price Category 8	+$137
Price Category 9	+$172
Price Category B	+$31
Price Category C	+$43
Price Category D	+$54
Price Category E	+$64
Price Category F	+$84
Price Category G	+$108
Price Category H	+$132
Price Category I	+$154
Price Category J	+$177
Price Category L	+$223

Step 12. Back Fabric	
For multiple fabrics (MF)	
Price Category 10	+$175
Price Category 1	+$0
Price Category 2	+$7
Price Category 3	+$14
Price Category 4	+$28
Price Category 5	+$47
Price Category 9	+$145
Price Category B	+$27
Price Category C	+$36
Price Category D	+$45
Price Category E	+$54
Price Category F	+$70
Price Category G	+$91
Price Category H	+$110
Price Category I	+$130
Price Category L	+$188

Valor™ Easy Access Chair HV110E

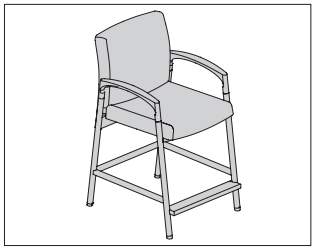

Product Information

Description

This easy access chair has an upholstered seat and upholstered back. 4-leg base has a choice of standard or wallsaver glides. Arm caps are available in black or pewter.

Notes

Easy access chair does not stack.

Customer's Own Material (COM) requires 1.53 yards for the one fabric (1F) configuration. For the multiple fabrics (MF) configuration, seat requires 0.89 yards and back requires 0.78 yards. See Order Information in appendices.

Dimensions

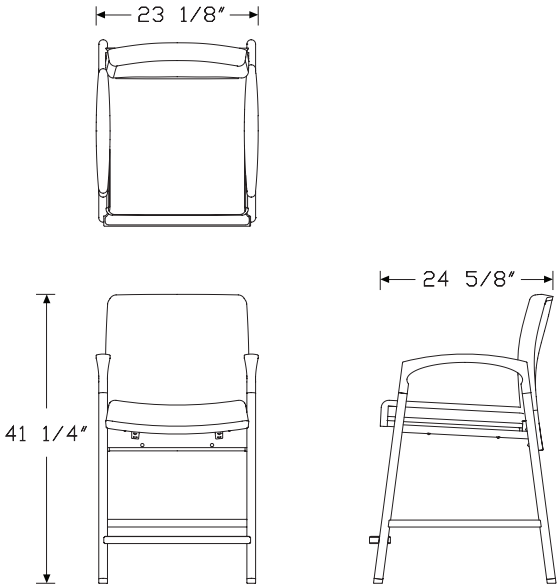

Specification Information

Step 1.

HV1 A

Step 2. Size		
10EA.	23″ wide A	+$1448

Step 3. Upholstered Cushion Covers		
S	standard covers A	+$0
P	removable covers A	+$167

Step 4. Fabric Configuration		
1F	one fabric A	+$0
MF	multiple fabrics A	+$118

Step 5. Arm Cap Detail		
R	urethane arm caps A	+$0

Step 6. Arm Cap Finish		
BK	black A	+$0
PW	pewter A	+$0

Step 7. Glides		
STD	standard glides A	+$0
WSR	wallsaver glides A	+$0

Step 8. Moisture Barrier Option		
MBN	no moisture barrier A	+$0
MBB	moisture barrier back only A	+$74
MBS	moisture barrier seat only A	+$74
MBX	moisture barrier seat and back A	+$149

Step 9. Paint Type		
X	textured paint on smooth steel A	+$0
S	smooth paint on smooth steel A	+$0

Step 10. Powdercoat Frame Finish

For textured paint on smooth steel (X)		
G1	graphite A	+$0
MS	metallic silver A	+$0
XT	titanium A	+$0

For smooth paint on smooth steel (S)		
BK	black A	+$0
MS	metallic silver A	+$0
XT	titanium A	+$0

Step 11. Footrest Finish	
BK black A	+$0

Step 12.	
Fabric	
For one fabric (1F)	
Price Category 10	+$463
Price Category 1	+$0
Price Category 2	+$19
Price Category 3	+$39
Price Category 4	+$73
Price Category 5	+$124
Price Category 7	+$0
Price Category 8	+$307
Price Category 9	+$385
Price Category B	+$69
Price Category C	+$95
Price Category D	+$119
Price Category E	+$145
Price Category F	+$187
Price Category G	+$242
Price Category H	+$294
Price Category I	+$345
Price Category L	+$499
Seat Fabric	
For multiple fabrics (MF)	
Price Category 10	+$207
Price Category 1	+$0
Price Category 2	+$9
Price Category 3	+$17
Price Category 4	+$33
Price Category 5	+$55
Price Category 7	+$105
Price Category 8	+$137
Price Category 9	+$172
Price Category B	+$31
Price Category C	+$43
Price Category D	+$54
Price Category E	+$64
Price Category F	+$84
Price Category G	+$108
Price Category H	+$132
Price Category I	+$154
Price Category J	+$177
Price Category L	+$223

Step 13. Back Fabric	
For multiple fabrics (MF)	
Price Category 10	+$256
Price Category 1	+$0
Price Category 2	+$11
Price Category 3	+$21
Price Category 4	+$41
Price Category 5	+$69
Price Category 9	+$213
Price Category B	+$38
Price Category C	+$52
Price Category D	+$66
Price Category E	+$80
Price Category F	+$103
Price Category G	+$134
Price Category H	+$162
Price Category I	+$191
Price Category L	+$276

Valor™ Patient Chair HV151.

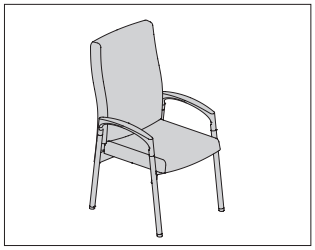

Product Information

Description

This high back patient chair has an upholstered seat and upholstered back. 4-leg base has standard or wallsaver glides. Arm caps are available in black or pewter.

Notes

High back chair does not stack.

Customer's Own Material (COM) requires 1.68 yards for the one fabric (1F) configuration. For the multiple fabrics (MF) configuration, seat requires 0.89 yards and back requires 1.08 yards. See Order Information in appendices.

Dimensions

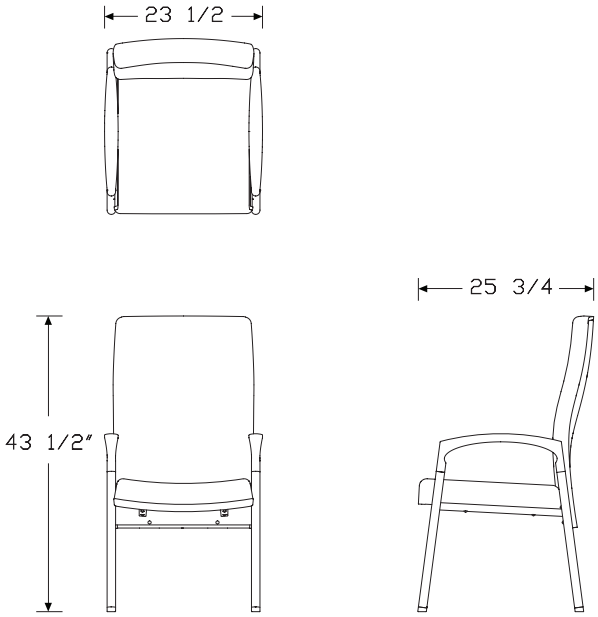

Specification Information

Step 1.

HV1 A

Step 2. Size

51.	23.25" wide A	+$1172

Step 3. Upholstered Cushion Covers

S	standard covers A	+$0
P	removable covers A	+$128

Step 4. Fabric Configuration

1F	one fabric A	+$0
MF	multiple fabrics A	+$118

Step 5. Arm Cap Detail

R	urethane arm caps A	+$0

Step 6. Arm Cap Finish

BK	black A	+$0
PW	pewter A	+$0

Step 7. Glides

STD	standard glides A	+$0
WSR	wallsaver glides A	+$0

Step 8. Moisture Barrier Option

MBN	no moisture barrier A	+$0
MBB	moisture barrier back only A	+$74
MBS	moisture barrier seat only A	+$74
MBX	moisture barrier seat and back A	+$149

Step 9. Paint Type

X	textured paint on smooth steel A	+$0
S	smooth paint on smooth steel A	+$0

Step 10. Powdercoat Frame Finish

For textured paint on smooth steel (X)

G1	graphite A	+$0
MS	metallic silver A	+$0
XT	titanium A	+$0

For smooth paint on smooth steel (S)

BK	black A	+$0
MS	metallic silver A	+$0
XT	titanium A	+$0

Step 11.	
Fabric	
For one fabric (1F)	
Price Category 10	+$463
Price Category 1	+$0
Price Category 2	+$19
Price Category 3	+$39
Price Category 4	+$73
Price Category 5	+$124
Price Category 7	+$0
Price Category 8	+$307
Price Category 9	+$385
Price Category B	+$69
Price Category C	+$95
Price Category D	+$119
Price Category E	+$145
Price Category F	+$187
Price Category G	+$242
Price Category H	+$294
Price Category I	+$345
Price Category L	+$499

Seat Fabric	
For multiple fabrics (MF)	
Price Category 10	+$207
Price Category 1	+$0
Price Category 2	+$9
Price Category 3	+$17
Price Category 4	+$33
Price Category 5	+$55
Price Category 7	+$105
Price Category 8	+$137
Price Category 9	+$172
Price Category B	+$31
Price Category C	+$43
Price Category D	+$54
Price Category E	+$64
Price Category F	+$84
Price Category G	+$108
Price Category H	+$132
Price Category I	+$154
Price Category J	+$177
Price Category L	+$223

Step 12. Back Fabric	
For multiple fabrics (MF)	
Price Category 10	+$256
Price Category 1	+$0
Price Category 2	+$11
Price Category 3	+$21
Price Category 4	+$41
Price Category 5	+$69
Price Category 9	+$213
Price Category B	+$38
Price Category C	+$52
Price Category D	+$66
Price Category E	+$80
Price Category F	+$103
Price Category G	+$134
Price Category H	+$162
Price Category I	+$191
Price Category L	+$276

Valor™ Bench, 43.25" Wide 891-B

Product Information

Description

Features:

- Heavy-duty steel construction
- Memory foam seat
- Urethane arms
- Powder-coated frame
- Replaceable components
- Indoor Advantage™ Gold Certified

Notes

Depth—24 1/2"
Height—26 1/4"
Seat Width—40"
Seat Height—19 1/2"
Weight—70 lbs
COM—1 1/4 yds

Specification Information

Step 1.

891 A

Step 2. Size		
-B2	43.25" wide A	+$1655

Step 3. Covers		
S	standard covers A	+$0
P	removable covers A	+$169

Step 4. Fire Retardancy		
NR	not fire retardant (non CTB-133) A	+$0

Step 5. Fabric Configuration		
1F	one fabric A	+$0

Step 6. Arm Cap Detail		
R	urethane arm caps A	+$0

Step 7. Arm Cap Finish		
BK	black A	+$0
PW	pewter A	+$226

Step 8. Powdercoat Frame Finish		
G1	graphite textured A	+$0
MSS	metallic silver smooth A	+$0
MST	metallic silver textured A	+$0
PQT	powdercoat quote option A	+$0
XTS	titanium smooth A	+$0
XTT	titanium textured A	+$0

Step 9. Moisture Barrier Option		
MBN	no moisture barrier A	+$0
MBS	moisture barrier seat only A	+$150

Step 10. MicrobeCare Selection		
MCN	no MicrobeCare protection A	+$0
MCY	MicrobeCare protection A	+$75

Step 11. Fabric	
Price Category (Nemschoff) Series 2 A	-$44
Price Category (Nemschoff) Series 3	+$0
Price Category (Nemschoff) Series 4	+$74
Price Category (Nemschoff) Series 5	+$150
Price Category (Nemschoff) Series 6	+$239
Price Category (Nemschoff) Series 7	+$329
Price Category (Nemschoff) Series 8	+$444

Valor™ Side Table HV1T6.

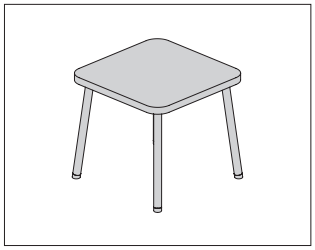

Product Information

Description

This 22″ square table has a 1″ thick laminate top and powder-coated metal legs with nonmarring 7/8″ glides. Shipped knocked down.

Dimensions

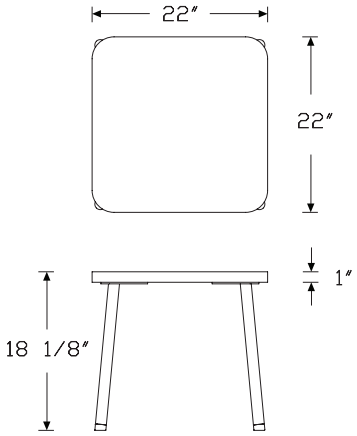

Specification Information

Step 1.

HV1 A

Step 2. Width

T6.	22″ wide A	

Prices for Steps 1-2.

HV1T6.		$719

Step 3. Paint Type

X	textured paint on smooth steel A	+$0
S	smooth paint on smooth steel A	+$0

Step 4. Powdercoat Frame Finish

For textured paint on smooth steel (X)

G1	graphite A	+$0
MS	metallic silver A	+$0
XT	titanium A	+$0

For smooth paint on smooth steel (S)

BK	black A	+$0
MS	metallic silver A	+$0
XT	titanium A	+$0

Step 5. Top Finish		
76	light brown walnut A	+$0
8Q	folkstone grey A	+$0
91	white A	+$0
98	studio white A	+$0
CL	cool grey neutral A	+$0
HF	inner tone light A	+$0
HM	natural maple A	+$0
HP	light anigre A	+$0
HX	aged cherry A	+$0
HY	walnut on cherry A	+$0
LA	light ash A	+$0
LBA	clear on ash A	+$0
LBB	oak on ash A	+$0
LBC	walnut on ash A	+$0
LBD	dark brown walnut A	+$0
LBF	neutral twill A	+$0
LBG	sarum twill A	+$0
LBH	earthen twill A	+$0
LBJ	graphite twill A	+$0
LBM	crisp linen A	+$0
LBN	classic linen A	+$0
LBP	casual linen A	+$0
LBQ	white twill A	+$0
LBR	phantom ecru A	+$0
LBS	phantom cocoa A	+$0
LBU	medium matte walnut A	+$0
LBV	warm grey teak A	+$0
LT	light tone A	+$0
LU	soft white A	+$0
WL	sandstone A	+$0
WN	warm grey neutral A	+$0

Step 6. Edge Finish		
76	light brown walnut	+$0
8Q	folkstone grey	+$0
91	white	+$0
98	studio white	+$0
BU	black umber	+$0
CL	cool grey neutral	+$0
HF	inner tone light	+$0
HM	natural maple	+$0
HP	light anigre	+$0
HX	aged cherry	+$0
HY	walnut on cherry	+$0
LA	light ash	+$0
LBA	clear on ash	+$0
LBB	oak on ash	+$0
LBC	walnut on ash	+$0
LBD	dark brown walnut	+$0
LBF	neutral twill	+$0
LBG	sarum twill	+$0
LBH	earthen twill	+$0
LBJ	graphite twill	+$0
LBM	crisp linen	+$0
LBN	classic linen	+$0
LBP	casual linen	+$0
LBQ	white twill	+$0
LBR	phantom ecru	+$0
LBS	phantom cocoa	+$0
LBU	medium matte walnut	+$0
LBV	warm grey teak	+$0
LU	soft white	+$0
WL	sandstone	+$0
WN	warm grey neutral	+$0

Index by Product Name

Nemschoff® Valor™ Family	
Valor™ Bench, 43.25" Wide	page(s) 27
Valor™ Easy Access Chair	23
Valor™ Patient Chair	25
Valor™ Plus Chair, 33" Wide	7
Valor™ Plus Chair, 43" Wide	9
Valor™ Side Chair	5
Valor™ Side Table	29
Valor™ Stacking Chair, Armless	19
Valor™ Stacking Chair with Arms	21
Valor™ Three-Seat Multiple Seating, No Center Arm, No Center Leg	15
Valor™ Three-Seat Multiple Seating with Intervening Arm and Leg	17
Valor™ Two-Seat Multiple Seating, No Center Arm, No Center Leg	11
Valor™ Two-Seat Multiple Seating with Intervening Arm and Leg	13

Index by Product Number

891-B	Valor™ Bench, 43.25" Wide	page(s) 27
HV1OB3	Valor™ Plus Chair, 33" Wide	7
HV1OB4	Valor™ Plus Chair, 43" Wide	9
HV1T6.	Valor™ Side Table	29
HV110.	Valor™ Side Chair	5
HV110E	Valor™ Easy Access Chair	23
HV120.	Valor™ Two-Seat Multiple Seating, No Center Arm, No Center Leg	11
HV122.	Valor™ Two-Seat Multiple Seating with Intervening Arm and Leg	13
HV130.	Valor™ Three-Seat Multiple Seating, No Center Arm, No Center Leg	15
HV133.	Valor™ Three-Seat Multiple Seating with Intervening Arm and Leg	17
HV151.	Valor™ Patient Chair	25
HV191.	Valor™ Stacking Chair, Armless	19
HV192.	Valor™ Stacking Chair with Arms	21

20-Day or Less/Assigned Lead-Time Order Information — Healthcare

20-Day or Less/Assigned Lead-Time Programs

20-day or less and assigned lead-time products are designed for established Herman Miller dealers with pre-approved credit.

Products are distributed from multiple manufacturing facilities across the United States. All products and options not designated by an Assigned Lead-Time icon A will ship in 20 business days or less after being acknowledged by Herman Miller. Products and options designated by an A are on the assigned lead-time program and will ship in 20 days, less than 20 days, or more than 20 days from order acknowledgement.

Ordering Procedure

Please place orders through Order Manager. If this is not available to you, place orders through mail or fax. Verbal purchase orders will not be accepted.

Order Entry fax number: (616) 654 3085.

For more information, contact your Customer Care representative at: (866) 854 3048 EXT 3400

Shipments and Delivery

Per Herman Miller Terms and Conditions.

Changes and Cancellation

Per Herman Miller Terms and Conditions.

Customer's Own Material/Customer's Own Leather Order Information — Seating

Packaging

Packaging varies according to individual product. A surcharge may be added for special packaging requests. Contact Customer Care for specific information.

Customer's Own Material/Customer's Own Leather

Program Overview

The Customer's Own Material (COM) and Customer's Own Leather (COL) program gives you the option of using textiles other than those listed. Herman Miller will test textiles for application to Herman Miller products and will process orders for those with approved COM/COL textiles only. COM/COL are assigned lead-time textiles.

Omni lists an overview of fabrics and leathers that have been tested and indicates whether or not they were approved for application to Herman Miller products.

Specific information on the terms and conditions, testing, approval, and ordering process for COM/COL is listed below. Questions about the COM/COL program and requests for assistance may be directed to your COM representative at:
(616) 654 3400
(866) 854 3048 EXT 6543400

Customer's Own Material/Customer's Own Leather Warranty

Herman Miller does not warrant COM/COL textiles. COM/COL textiles are tested for application only; they are not tested for performance. The Herman Miller warranty does apply to the underlying products.

Suppliers of COM/COL textiles are responsible for color consistency within commercial tolerances, UV stability, and resistance to soiling and perspiration.

Customer's Own Material/Customer's Own Leather Pricing

COM is a Category 1 fabric. There are no application charges for COM fabrics. COL is a Category 7 textile; refer to prices on specific products to determine the application charge.

Ordering and payment for COM/COL textile yardage are the responsibility of the customer and the textile supplier.

If desired, Herman Miller will purchase COM textiles directly from Maharam, Camira, C.F. Stinson, Guilford of Maine, Luna Textiles, Momentum Textiles and Ultrafabrics to simplify ordering and shipment. For this service, refer to the Supplier Connection program.

Textile Approval

1. Select a COM textile and a Herman Miller product.
2. If your textile does not show as tested in Omni, submit a request. You will be required to select a specific color of the textile and feature of the product to test, i.e., seat, back, etc.
3. Herman Miller will notify you of approval or disapproval within 4 days from receipt of the test yardage.

Ordering Products with COM/COL

1. Refer to the specific products to determine the yardage required for COM/COL textiles.
   Note: Additional yardage may be needed due to the unique characteristics of a textile.
2. Obtain the COM ID# in Omni. If the color you are ordering does not have a COM ID# assigned, click "Create ID".
3. Enter your order on Order Manager in Omni.
4. Upon receipt of your purchase order, Herman Miller will send you a PO acknowledgment.
5. Arrangements must be made for the textiles to be shipped from the supplier to Herman Miller for application to the seating products. Textiles must be tagged with the assigned identification number and the roll yardage quantity. See Omni for shipping procedures and current shipping addresses or contact a COM representative at (616) 654 3400 or (866) 854 3048 EXT 6543400.

   Products will be scheduled for production when COM/COL textiles are received at Herman Miller. Standard lead times in effect at that time will apply.

   Note: If textiles are to be purchased directly by Herman Miller through the Supplier Connection program, Herman Miller will handle the ordering and shipping process and will schedule your order for production upon receipt of your purchase order (dependent on textile availability). Refer to the Supplier Connection program for more information.

Supplier Connection

Program Overview

The Supplier Connection program is a service offered by Herman Miller to purchase approved COM textiles directly from Maharam, Camira, C.F. Stinson, Guilford of Maine, Luna Textiles, Momentum Textiles and Ultrafabrics. When you select a textile through this program, Herman Miller will facilitate the ordering, scheduling, and shipment of the textile directly with the supplier.

Suppliers included in the Supplier Connection program keep an active inventory of textiles that are pre-approved for application to Herman Miller products. Pre-approval applies only to the suitability of a textile for manufacturing and application to a Herman Miller product. Omni provides an overview of fabrics that have been tested and indicates whether or not they were approved for application to Herman Miller products.

Specific information on the terms and conditions, testing, approval, and ordering process for the Supplier Connection program is listed below. Questions and requests for assistance may be directed to your COM representative at:
(616) 654 3400
(866) 854 3048 EXT 6543400

Supplier Connection Warranty

Textiles purchased by Herman Miller through the Supplier Connection program are COM and are not warranted by Herman Miller. COM textiles are tested for application only; they are not tested for performance. The Herman Miller warranty does apply to the underlying products.

Suppliers of COM textiles are responsible for color consistency within commercial tolerances, UV stability, and resistance to soiling and perspiration.

Supplier Connection Pricing

Textiles purchased by Herman Miller through the Supplier Connection program are COM. COM is a Category 1 fabric. There are no application charges for COM fabrics.

Payment for textiles purchased by Herman Miller through the Supplier Connection program is the responsibility of the customer or dealer. Herman Miller will invoice the order at a total product cost based on the supplier's price published at the time of the order.

Textile Approval

1. Select a COM textile and a Herman Miller product.
2. If your textile does not show as tested in Omni, submit a request. You will be required to select a specific color of the textile and feature of the product to test, i.e., seat, back, etc.
3. Herman Miller will notify you of approval or disapproval within 4 days from receipt of the test yardage.

Ordering Products with Supplier Connection COM

1. Identify and include the following information on your purchase order:
   - Product number and option
   - Herman Miller's COM identification number
2. Enter your order on Order Manager in Omni.
3. Upon receipt of the purchase order, Herman Miller will process your order and send you a PO acknowledgment. Herman Miller will determine the yardage required to produce your product and will order and schedule for delivery the required textile. Standard lead times in effect at the time the textile is allocated at the supplier will apply to products ordered through this program.

Proprietary Textiles Application Chart — Seating

• *Available*

[A] *Assigned lead-time textile.*

[N] *Non-woven textile.*

See following page for exception notes.

	Aeron® Chairs	Cosm™ Chairs	Mirra® 2 Chairs/Stools	Celle® Chairs/Stools	Embody® Chairs	Sayl® Work Chairs/Stools	Sayl Side Chairs	Setu® Chairs/Stools	Setu Lounge Chair/Ottoman	Verus™ Work Chairs/Stools Back	Verus Work Chairs/Stools Seat	Verus Side Chairs Back	Verus Side Chairs Seat	Verus Plus Chairs	Aside® Chairs	Caper® Chairs/Stools	Keyn Chair Group Back	Keyn Chair Group Seat	Lino™ Chairs Back	Lino Chairs Seat	Locale® Bench Cushion	OE1 Storage Trolley Cushion Top	Public Office Landscape® Back	Public Office Landscape Seat	Plex® Lounge Furniture	Swoop™ Lounge Seating - Fully Upholstered	Swoop Lounge Seating - Plywood	Valor™ Seating	Nemschoff® Whisk™ Chairs	Eames® Tandem Sling Seating	Cushion Tops	Workspaces
Price Category 1																																
COM Customer's Own Material [A]				14		1	1			1	1	1	1	1	1			1		1	1	1			1	1	1		1	1	1	1
231_ _ 8Z Pellicle®	•																															
1A7_ _AireWeave™ 2			•																													
8T_ _ Crossing				•				•	•						•			•			•	•				•	•				•	•
3DE_ _Dex				14		•	•	•		•	•	•	•	•	•			•			•	•		•	19	•		•			•	•
4RM_ _Duo																			•													
6V_ _ Flexnet™																•																
95_ _ Gem				14				•	•						•						•	•			•	•					•	•
845_ _ Intercept		•																														
365_ _Interweave 2										•		•																				
4W_ _ Lyris 2™								•	•																							
1MN_ _Monologue				14		24	22	•	•		•	•	•				•	•		•	•	•		•	•	•	•	•			•	•
4SC_ _ Scatter				14		•	•	•		•	•	•	•	•	•		•	•		•	•	•		•	•	•	•				•	•
3DK_ _Stretch Knit [A]						21																										
235_ _Tailored				•		•	•	•		•	•	•	•		•		•	•		•				•	23			•			7	•
1WS_ _Whisper				14		24	•	•	•		•	•	•	•	•		•	•		•	•	•		•	•	•	•	•			•	•
Price Category 2																																
3AR_ _Aristo				14		•	•	•	•	•	•	•	•	•	•		•	•		•	•	•		•	•	•		9			7	•
92_ _ Crepe				•		•	•	•	•	•	•	•	•	•	•		•	•		•	•	•		•	•	•	•	•			•	•
3EP_ _Epic				14		•	•			•	•	•	•		•			•		•				•	•	•		•			7	•
1LM_ _Loom				14		•	•			•	•	•	•	•			•	•		•	•	•		•			•	23	•		•	•
1MV_ _Marvel [N]						21	22	•										•				•						•	•		•	
1HA_ _Medley				15	•	•	22			•	•	•	•	•	•		•	•		•	•	•		•	•	•		•	•		•	•
4ME_ _ Mellow				14		•	22	•	•	•	•	•	•	•	•		•	•		•	•	•		•		•	•	•			•	•
30_ _ Rhythm				•	23	•	•			•	•	•	•	•	•		•	•		•	•	•		•		•	•	•			•	
1RV_ _Rivet				14		21	22					•	•	•	•		•	•			•	•		•	•	•	•	9			•	•
3SL_ _Sequel [N]				15		•	•	•	•	•	•	•	•	•	8		•	•		•	•	•		•	•	•	•	•	•	23	•	•
4TE_ _ Terra				14		•	22			•	•	•	•	•	•		•	•		•				•		•	•	•			7	•
8R_ _ Twist				•		•	•	•	•	•	•	•	•	•	•		•	•		•	•	•		•	•	•	•	•			•	•
Price Category 3																																
3AC_ _Ace						21	•			•	•	•	•	•	8		•	•		•	•	•		•	19			•			•	
4LN_ _Landing [N]																														•		
8M_ _ Latitude™			23			•	•													•						•	•					
22V_ _String Plaid				14		•	•			•	•	•	•	•	•			•			•	•		•				•			•	•
Price Category 4																																
3DM_ _ Daydream				14		21	•	•	•		•		•	•	•			•		•	•	•			•	•	•				•	•
1DL_ _Dialogue																							•									
213_ _Mercer				14		21	22			•	•	•	•	•			•	•		•		•		•		•	•	•			•	
1A9_ _Network																							•									
6S_ _ Quilty				14		•	•			•	•	•	•		•		•	•		•	•	•				•		9			•	•
22P_ _Strata						•	•	•		•	•	•	•	•	•		•	•		•	•			•	•	•	•	•			•	
3SY_ _Sync				•	•	•	•	•	•	•	•	•	•		•		•	•		•	•			•	•	•	•	•			•	

continued on next page

Proprietary Textiles Application Chart — Seating continued

• *Available*

[A] *Assigned lead-time textile.*

[N] *Non-woven textile.*

See below for exception notes.

	Aeron® Chairs	Cosm™ Chairs	Mirra® 2 Chairs/Stools	Celle® Chairs/Stools	Embody® Chairs	Sayl® Work Chairs/Stools	Sayl Side Chairs	Setu® Chairs/Stools	Setu Lounge Chair/Ottoman	Verus™ Work Chairs/Stools Back	Verus Work Chairs/Stools Seat	Verus Side Chairs Back	Verus Side Chairs Seat	Verus Plus Chairs	Aside® Chairs	Caper® Chairs/Stools	Keyn Chair Group Back	Keyn Chair Group Seat	Lino™ Chairs Back	Lino Chairs Seat	Locale® Bench Cushion	OE1 Storage Trolley Cushion Top	Public Office Landscape® Back	Public Office Landscape Seat	Plex® Lounge Furniture	Swoop™ Lounge Seating - Fully Upholstered	Swoop Lounge Seating - Plywood	Valor™ Seating	Nemschoff® Whisk™ Chairs	Eames® Tandem Sling Seating	Cushion Tops	Workspaces
Price Category 5																																
3CY __Cozy				14		•	•	•	•	•	•	•	•	•	•		•	•		•	•			•	•	•	•	•			•	
14A __Hopsak				14		•	•	•	•	•	•	•	•	•	•		•	•		•	•	•		•	•	•	•	•			•	•
3SU __Summit [N]				15		•	•			•	•	•	•	•						•	•			•	•	•	•	•			•	
Price Category 6																																
35__ Balance					•																											
Price Category 7																																
COL Customer's Own Leather [A]	1			14											8							1									1	
Price Category 8																																
No fabrics available at this time																																
Price Category 9																																
21__ Leather [N]	23			14											8					•		•					•				•	

Application Note: Herman Miller cannot guarantee material/pattern alignment in adjacent products. For example, a fabric's pattern may not align from one pedestal cushion top to the next, or from one chair to another.

1 *Refer to price book appendices and Omni for COM/COL information.*
7 *Available on 1" Cushion Tops only.*
8 *Only available on the Aside nonupholstered outer back option (PB).*
9 *Available on Valor upholstered seat only.*
14 *Available on Celle UC (upholstered seat) and Celle UF (upholstered seat) Chairs.*
15 *Available only on Celle HC (upholstered seat with protective edge) and Celle HF (upholstered seat) Chairs.*
19 *Available on Plex seat only.*
21 *Not available on Sayl upholstered back work chairs.*
22 *Not available on Sayl side chairs with upholstered backs.*
23 *Available in select colors. Refer to "Proprietary Textile Colors-Seating" for color offering.*
24 *Not available on Sayl upholstered High-Back Work Chairs.*
25 *Not available on Sayl side chairs with upholstered backs. Available in select colors. Refer to "Proprietary Textile Colors-Seating" for color offering.*

Price Category 1

Customer's Own Material	
See Order Information in Appendices.	
Assigned lead-time textile. A	

8Z Pellicle®	
For New Aeron® Chairs	
56% elastomeric	
44% polyester	
23101	Mineral
23102	Carbon
23103	Graphite

AireWeave™ 2	
For Mirra® 2 Chairs	
67% elastomeric	
33% antimony-free polyester	
1A701	Alpine
1A702	Slate Grey
1A703	Graphite
1A704	Lime Green
1A705	Cappuccino
1A706	Urban Orange
1A707	Dark Turquoise
1A708	Twilight

Crossing	
54" wide	
86% antimony-free polyester	
14% polyester	
8T03	Wicker
8T04	Porcelain
8T05	Warm Grey
8T10	Tomato
8T13	Green Apple
8T16	Periwinkle
8T17	Cerulean
8T18	Indigo
8T19	Shale
8T22	Tin
8T23	Graphite
8T24	Black

Dex	
54" wide	
50% recycled polyester	
50% polyester	
3DE01	Frost
3DE02	Silver Pine
3DE03	Stone
3DE04	Shale
3DE05	Charcoal

Duo	
For Lino™ Chairs	
52% polyester	
48% elastomeric	
4RM01	Mineral
4RM02	Poppy
4RM03	Green Leaf
4RM04	Jade
4RM05	Shadow
4RM06	Graphite

Flexnet™	
For Caper® Chairs	
69% elastomeric	
31% polyester	
6V01	Black
6V02	Silver Grey

Gem	
54" wide	
100% antimony-free polyester	
9502	Tangerine
9503	Red
9507	Twilight
9508	Bayou
9510	Berry Blue
9511	Aqua Green
9512	Green Apple
9514	Black
9515	Slate Grey
9516	Fog

Intercept	
For Cosm™ Chairs	
60% elastomeric	
40% polyester	
84501	Graphite
84502	Carbon
84503	Mineral
84504	Nightfall
84505	Glacier
84506	Canyon

Interweave 2	
For Verus™ Chairs	
65% elastomeric	
35% polyester	
36501	Iceberg
36502	Poppy
36503	Beachglass
36504	Blue Grotto
36505	Slate
36506	Shale

Lyris 2™	
For Setu® Chairs	
74% elastomeric	
26% polyester	
4W21	Alpine
4W22	Mango
4W23	Chartreuse
4W25	Berry Blue
4W26	Slate Grey
4W28	Chino
4W29	Rattan
4W30	Java
4W31	Graphite

Monologue	
54" wide	
56% recycled polyester	
44% polyester	
1MN01	Linen
1MN02	Alabaster
1MN03	Truffle
1MN04	Folkstone
1MN05	Silver Pine

Monologue *continued*	
1MN06	Slate
1MN07	Seed
1MN08	Yellow Oxide
1MN09	Persimmon
1MN10	Tundra
1MN11	Meadow
1MN12	Blue Sky
1MN13	Blue Spruce
1MN14	Deep Sea

Scatter	
54" wide	
100% recycled polyester, with 26% ocean bound plastic	
4SC01	Alpine
4SC02	Fog
4SC03	Shale
4SC04	Persimmon
4SC05	Red Violet
4SC06	Lime Zest
4SC07	Olive
4SC08	Glacier
4SC09	Blue Sky
4SC10	Lagoon
4SC11	Slate Grey
4SC12	Blue Black

Stretch Knit	
Assigned lead-time textile. A	
Available only on Sayl® Suspension Back Work Chairs	
97% polyester, 3% spandex	
3DK01	Fog
3DK02	Slate Grey
3DK03	Java
3DK04	Black
3DK05	Red
3DK06	Green Apple
3DK07	Berry Blue

Price category 1 continued on next page

Proprietary Textile Colors — Seating

continued

Price Category 1

continued

Price Category 2

Tailored	
54” wide	
56% polyester	
44% recycled polyester	
23501	Studio White *
23502	Sugar *
23503	Tomato
23504	Orchid
23505	Boysenberry
23506	Chive
23507	Bluegrass
23508	Cobalt
23509	Cadet
23510	Fog
23511	Graphite
23512	Black
23513	Coffee

* Colors not available on Plex™ Lounge Furniture.

Whisper	
54” wide	
73% recycled polyester	
27% polyester	
with 11.3% ocean bound plastic	
1WS01	Sand Dollar
1WS02	Pebble
1WS03	Silver Birch
1WS04	Iceberg
1WS05	Silver Pine
1WS06	Carbon
1WS07	Cumin
1WS08	Adobe
1WS09	Strawberry
1WS10	Blush
1WS11	Eggplant
1WS12	Willow
1WS13	Sea Grass
1WS14	Pool
1WS15	Blueberry
1WS16	Glacier
1WS17	Grey
1WS18	Canyon

Aristo	
54” wide	
88% recycled polyester	
12% polyester	
Acrylic backing	
3AR01	Forest Moss
3AR02	Light Brindle
3AR03	Mink
3AR04	Copper
3AR05	Adobe
3AR06	Cherry
3AR07	Lilac
3AR08	Green Apple
3AR09	Surf
3AR10	Waterfall
3AR11	Cadet
3AR12	Tin
3AR13	Pewter
3AR14	Grey Brindle
3AR15	Grey Black

Crepe	
54” wide	
100% recycled polyester,	
with 43.6% ocean bound plastic	
9201	Licorice
9203	Smoke
9207	Cherry
9223	Cadet
9241	Beachglass
9249	Stone
9251	Fog
9252	Slate Grey
9261	Shale
9262	Graphite
9265	Mineral
9266	Persimmon
9267	Juniper
9268	Glacier
9269	Cascade
9270	Navy

Epic	
54” wide	
56% recycled polyester	
44% polyester	
Acrylic backing	
3EP01	Alabaster
3EP02	Smoke
3EP03	Falcon
3EP04	Citrus Spring
3EP05	Copper
3EP06	Urban Orange
3EP07	Poppy
3EP08	Wild Plum
3EP09	Sugar Plum
3EP10	Clover
3EP11	Loden
3EP12	Everglade
3EP13	Mist
3EP14	Peacock
3EP15	Cadet
3EP16	Indigo
3EP17	Spring Wood
3EP18	Grey Brindle
3EP19	Seed
3EP20	Carbon Dark

Loom	
54” wide	
100% polyester	
1LM01	Linen *
1LM02	Brown Sugar and Spice
1LM03	Brick and Mortar
1LM04	Salt and Pepper
1LM05	Black
1LM06	Lemongrass
1LM08	Wild Berry
1LM09	Loden
1LM10	Jade
1LM11	Deep Sea

* Color not available on Valor™ Seating

Marvel	
54” wide	
100% pvc-free polyurethane	
1MV01	Summer White
1MV02	Sand Dollar
1MV03	Espresso
1MV04	Folkstone Grey
1MV05	Graphite
1MV06	Onyx
1MV07	Polar Blue
1MV08	Blush Grey
1MV09	Woodrose
1MV10	Citrus
1MV11	Adobe
1MV12	Red
1MV13	Kiwi Green
1MV14	Pine
1MV15	Teal Green
1MV16	Twilight

Medley	
54” wide	
100% polyester	
1HA01	Stone
1HA02	Trail
1HA03	Charcoal
1HA04	Cinder
1HA05	Citrus
1HA06	Papaya
1HA07	Chutney
1HA08	Tundra
1HA09	Feather Grey
1HA10	Chartreuse
1HA11	Loden
1HA12	Peacock
1HA13	Bayou
1HA14	Blue Grotto
1HA15	Blueberry
1HA22	Khaki
1HA23	Pewter
1HA24	Yellow Oxide
1HA25	Vintage Rose
1HA26	Raspberry
1HA27	Acai Berry

Price category 2 continued on next page

Price Category 2
continued

Price Category 3

Mellow	
54” wide	
100% recycled polyester, with 16% ocean bound plastic	
4ME01	Mineral
4ME02	Pewter
4ME03	Wisteria
4ME04	Olive
4ME05	Glacier
4ME06	Oceanside
4ME07	Charcoal

Rhythm	
54” wide	
100% polyester	
3001	Kiwi Green *
3002	Green Apple *
3003	Peacock *
3004	Bayou *
3005	Berry Blue
3006	Iris *
3007	Twilight
3008	Pumpkin *
3009	Poppy *
3010	Molasses *
3011	Mulberry *
3012	Khaki *
3013	Mink *
3014	Black
3015	Charcoal

* Colors not available on Embody® Chair.

Rivet	
54” wide	
100% recycled polyester	
1RV01	Twig
1RV02	Deep Clay
1RV03	Woodrose
1RV04	Otter
1RV05	Hemlock
1RV06	Olive
1RV07	Lagoon
1RV08	Deep Sea
1RV09	Charcoal
1RV10	Grey Brindle

Sequel	
54” wide	
100% vinyl	
100% polyester knit backing	
Resilience® finish	
3SL01	White
3SL02	Pebble
3SL03	Mushroom
3SL04	Stone
3SL05	Chestnut
3SL06	Rattan
3SL07	Black Cherry
3SL08	Tundra
3SL09	Seal
3SL10	Blue Fog
3SL11	Folkstone
3SL12	Shale
3SL13	Slate Grey
3SL14	Charcoal
3SL15	Carbon Dark
3SL28	Navy *

* Color available on Eames® Tandem Sling Seating.

Terra	
54” wide	
100% post-consumer recycled biodegradable polyester *	
4TE01	Spring Wood
4TE02	Zinc
4TE03	Pine Cone
4TE04	Charcoal

* 1% biodegradation in 1,278 days under ASTM D5511 conditions. No evidence of further degradation.

Twist	
54” wide	
80% antimony-free polyester	
13% recycled polyester	
7% polyester	
8R05	Wicker
8R10	Poppy
8R14	Tin
8R15	Shale
8R16	Graphite
8R17	Birch
8R18	Sepia
8R22	Blueberry
8R23	Green Apple
8R26	Gunmetal
8R27	Cinder
8R28	Citrus
8R29	Pekoe
8R30	Tangerine
8R31	Red Plum
8R32	Wisteria
8R33	Forest
8R34	Jade Dark
8R35	Waterfall
8R36	Midnight Blue
8R37	Carbon Dark

Ace	
54” wide	
100% polyurethane	
Polyester knit backing	
Stain resistant finish	
3AC01	Summer White
3AC02	White Ash
3AC03	Rye
3AC04	Metal
3AC05	Clay
3AC06	Chestnut
3AC07	Citrus
3AC08	Camelback
3AC09	Chipotle
3AC10	Claret
3AC11	Slate Purple
3AC12	Artichoke
3AC13	Sepia Dark
3AC14	Aloe
3AC15	Flint
3AC16	Blue Sky
3AC17	Oceanside
3AC18	Midnight
3AC19	Spring Wood
3AC20	Frost
3AC21	Lead
3AC22	Black

Landing	
For Eames® Tandem Sling Seating	
54” wide	
100% TPE	
Polyester knit backing	
4LN01	Black

Price category 3 continued on next page

Price Category 3
continued

Latitude™
61” wide
100% polyester

8M01	Graphite
8M02	Shadow
8M10	Alpine
8M17	Black
8M21	Slate Grey
8M22	Lime Green
8M23	French Press
8M24	Urban Orange
8M25	Dark Turquoise
8M26	Twilight

Latitude
Colors for Mirra 2 Chairs
100% polyester

8M10	Alpine
8M17	Black
8M21	Slate Grey
8M22	Lime Green
8M23	French Press
8M24	Urban Orange
8M25	Dark Turquoise
8M26	Twilight

String Plaid
54” wide
100% recycled polyester

22V01	Warm White on Khaki
22V02	Mint on Yellow Green
22V03	Mist on Blue Grey
22V04	Sky Blue on Red
22V05	Lime on Magenta
22V06	Bright Green on Green
22V07	Aqua Blue on Cerulean
22V08	Ivory on Black

Price Category 4

Daydream
54” wide
48% wool
41% recycled polyester
9% nylon
2% polyester

3DM01	Rye Grass
3DM02	Silver Birch
3DM03	Pewter
3DM04	Graphite
3DM05	Black
3DM06	Lemongrass
3DM07	Permission
3DM08	Juniper
3DM09	Sea Grass
3DM10	Nightfall

Dialogue
For Public Office Landscape®
Sectional Back/Social Chair Back
knit to size
100% polyester

1DL01	Light Brindle
1DL02	Dark Brindle

Mercer
54” wide
50% solution dyed recycled nylon
50% solution dyed nylon
BLOCKaide

21301	Stone
21303	Cayenne
21305	Pesto
21306	Teal Blue
21307	Ultramarine
21310	Charcoal

Network
For Public Office Landscape®
Sectional Back/Social Chair Back
knit to size
100% polyester

1A901	Warm White
1A902	Fog
1A903	Red
1A904	Wildberry
1A905	Green Apple
1A906	Twilight
1A907	Graphite

Quilty
56” wide
100% antimony-free polyester
GreenShield

6S03	Khaki
6S04	Straw
6S07	Brick
6S10	Mink
6S11	Green Apple
6S13	Indigo
6S14	Zinc
6S15	Slate
6S16	Beachwood
6S17	Paprika
6S18	Plum
6S19	Juniper
6S20	Grey Black

Strata
54” wide
50% solution dyed recycled nylon
50% solution dyed nylon
BLOCKaide

22P04	Pesto
22P05	Peacock
22P06	Blue Jay
22P07	Blueberry
22P09	Mango
22P10	Paprika
22P12	Wheat
22P13	Brownstone
22P14	Bayou

Sync
55” wide
100% polyester

3SY01	Pine Cone
3SY02	Citron
3SY03	Canyon
3SY04	Truffle
3SY05	Wild Berry
3SY06	Everglade
3SY07	Glacier
3SY08	Nightfall
3SY09	Dark Mineral
3SY10	Slate Grey
3SY11	Dark Carbon
3SY12	Black

Proprietary Textile Colors — Seating

continued

Price Category 5

Cozy

54” wide
100% wool

3CY01	Heathered Warm Grey
3CY02	Heathered Rye Grass
3CY03	Heathered Cool Grey
3CY04	Heathered Blue Grey
3CY05	Heathered Black
3CY06	Heathered Persimmon
3CY07	Heathered Loden
3CY08	Heathered Jade
3CY09	Heathered Lagoon
3CY10	Heathered Twilight

Hopsak

56” wide
100% recycled polyester

14A20	Black
14A22	Raw Umber Dark
14A26	Grey Blue Dark
14A30	Sepia Dark
14A38	Emerald Dark
14A39	Yellow Dark
14A40	Orange
14A41	Sienna
14A42	Olive Green Dark
14A43	Crimson
14A44	Crimson Dark Dark
14A45	Violet Dark
14A46	Pink Dark Dark
14A47	Ultramarine Dark
14A48	Cobalt Blue
14A49	Terra Cotta
14A50	Ochre Dark

Summit

54” wide
100% silicone
Polyester knit backing

3SU01	Bright White
3SU02	Oyster
3SU03	Zinc
3SU04	Sparrow
3SU05	Taupe
3SU06	Java
3SU07	Black
3SU08	Cherry
3SU09	Beachglass
3SU10	Midnight

Price Category 6

Balance

For Embody® chairs
100% polyester

3512	Carbon
3513	Black

Price Category 7

Customer’s Own Leather

See Order Information in Appendices. Assigned lead-time textile. A

Proprietary Textile Colors — Seating

continued

Price Category 8

No fabrics available at this time.

Price Category 9

Leather	
approx. 50 sq. ft. per hide	
100% leather	
2101	Ivory
2109	Black *
2110	Smoke
2111	Graphite
2112	Khaki
2113	Rattan
2114	Truffle
2115	Alpine
2116	Haze
2117	Sable Grey
2118	Dark Mineral **
2119	Dark Carbon ***
2120	Cranberry
2121	Deep Sea

* Armpad color available on Aeron® Chair, Graphite.
** Armpad color available on Aeron Chair, Mineral.
*** Armpad color available on Aeron Chair, Carbon.

Maharam®
Application Chart — Seating

• *Available*

A *Maharam textiles are on assigned lead times.*

[N] *Non-woven textile.*

See below for exception notes.

	Mirra® Chairs/Stools	Celle® Chairs	Sayl® Work Chairs/Stools	Sayl Side Chairs	Setu® Chairs/Stools	Setu Lounge Chair/Ottoman	Verus® Work Chairs/Stools Back	Verus Work Chairs/Stools Seat	Verus Side Chairs Back	Verus Side Chairs Seat	Verus Plus Chairs	Aside® Chairs	Caper® Chairs/Stools	Keyn Chair Group Back	Keyn Chair Group Seat	Lino® Chairs Seat	Locale® Bench Cushions	OE1 Storage Trolley Cushion Top	Public Office Landscape® Seat	Plex® Lounge Furniture	Swoop™ Lounge Seating - Fully Upholstered	Swoop Lounge Seating - Plywood	Valor™ Seating	Nemschoff® Whisk™ Chairs	Cushion Tops	Workspaces
Price Category 1																										
No fabrics available at this time.																										
Price Category 2																										
ZMA_ _ Metaphor - Maharam		14	16	16				•		•	•	•		•	•	•	•			•	•	•	•			•
8I1_ _ Muse - Maharam		14	16	16				•		•					•	•	•		•				26			•
Price Category 3																										
ZM2_ _ Meld - Maharam *		14	•	•	•	•	•	•	•	•		8			•	•	•	•	•	•	•				•	•
Price Category 4																										
ZLR_ _ Lariat - Maharam [N]		15	•	•			•	•	•	•	•			•	•			•	•	20			•	•	•	
Price Category 5																										
ZNC_ _Nico - Maharam		14	•	•			•	•	•	•	•	•		•	•	•	•		•	•	•	•	•		•	
Price Category 6																										
No fabrics available at this time.																										
Price Category 7																										
ZB3_ _Beck - Maharam		14	16	16	•	•		•		•	•	•		•	•	•	•		•	•	•	•	•		•	
Price Category 8																										
ZLU_ _ Luce - Maharam		14	16	16	•	•		•		•	•	•		•	•	•	•		•	•	•	•	•		•	
Price Category 9																										
ZC0_ _ Campana - Maharam		14	16	16				•		•	•	•		•	•	•	•		•	•	•	•	•		•	
ZGE_ _Gemma - Maharam		14	•	•	•	•	•	•	•	•	•	•		•	•	•	•		•	•	•	•	•		•	
ZJA_ _ Jasper - Maharam		14	16	16				•		•	•	•		•	•	•	•		•				•	•	7	
Price Category 10																										
ZGF_ _ Gemma Multi - Maharam		14	•	•	•	•	•	•	•	•	•	•		•	•	•	•		•	•	•	•	•		•	
ZGF_ _ Gemma Multi Reverse - Maharam		14	•	•	•	•	•	•	•	•	•	•		•	•	•	•		•	•	•	•	•		•	
ZP4_ _ Petra - Maharam		14	16	16				•		•	•	•		•	•	•	•		•	•	•	•			•	
Price Category A																										
No fabrics available at this time.																										
Price Category B																										
VM_ _ Medium - Maharam		14	•	•			•	•		•	•	•		•	•	•		•					•		•	•
TI_ _ Messenger - Maharam *		14	•	•	•	•	•	•	•	•		•		•	•	•		•		•	•	•	26		•	•
Price Category C																										
Z27_ _ Manner - Maharam		14	•	•				•		•		•			•	•		•		•	•	•	•		•	•
887_ _ Merit - Maharam		14	•	•			•	•	•	•		•			•	•		•	•	•	•	•			•	
Z3_ _ Metric - Maharam		14	•	•			•	•	•	•	•	•			•	•		•		•	•	•	•		•	•
ZML_ _Milestone - Maharam		14	•	•				•		•		•			•	•	•		•		•	•	•		•	•
8EY_ _ Murmur - Maharam		14	•	16				•		•		•			•	•			•	•	•		•		7	
Price Category D																										
8I8_ _ Bluff - Maharam			16	16			•	•	•	•	•	8			•				•	21		•	•		•	
ZMD_ _ Mode - Maharam		14	18	•			•	•	•	•	•	•			•		•	•		•	•	•			•	•
Price Category E																										
ZAT_ _ Article - Maharam [N]		14	16	16			•	•	•	•				•	•	•			•				•		7	
896_ _ Dwell - Maharam		14	16	16				•		•		•			•	•			•				•		7	
ZP2_ _ Pick - Maharam			18	•			•	•	•	•		•			•	•		•			•	•	•		•	
ZR2_ _ Roster - Maharam		15	16	16				•		•	•	•			•	•	•		•		•				•	
ZT3_ _ Technic - Maharam		14	18	•			•	•	•	•		•			•								•		7	

continued on next page

** Available in select colors on 20-day lead-time. Refer to "Maharam Colors - Seating" for 20-day colors.*

Maharam®
Application Chart — Seating *continued*

- *Available*

A *Maharam textiles are on assigned lead times.*

[N] *Non-woven textile.*

See below for exception notes.

	Mirra® Chairs/Stools	Celle® Chairs	Sayl® Work Chairs/Stools	Sayl Side Chairs	Setu® Chairs/Stools	Setu Lounge Chair/Ottoman	Verus® Work Chairs/Stools Back	Verus Work Chairs/Stools Seat	Verus Side Chairs Back	Verus Side Chairs Seat	Verus Plus Chairs	Aside® Chairs	Caper® Chairs/Stools	Keyn Chair Group Back	Keyn Chair Group Seat	Lino® Chairs Seat	Locale® Bench Cushions	OE1 Storage Trolley Cushion Top	Public Office Landscape® Seat	Plex® Lounge Furniture	Swoop™ Lounge Seating - Fully Upholstered	Swoop Lounge Seating - Plywood	Valor™ Seating	Nemschoff® Whisk™ Chairs	Cushion Tops	Workspaces
Price Category F																										
82T_ _ Apt - Maharam [N]			18	•			•	•	•	•					•				•	21	•		•		7	
871_ _ Brindle - Maharam		14	16	16				•		•		•			•	•		•	•				•		•	
ZC8_ _ Coin - Maharam		14	•	16				•		•		•			•			•							•	
87Z_ _ Conduit - Maharam		14	16	16			•	•	•	•		•			•	•			•						7	
VS_ _ Crush - Maharam					•	•	•	•	•	•											•		•		7	•
74M_ _Instill - Maharam [N]		15	18	16			•	•	•	•				•	•	•			•	•		•	•		7	
89N_ _ Keen - Maharam		15	16	16				•		•	•	•			•	•			•	•	•	•				
V9G_ _ Ledger - Maharam [N]		15	18	16			•	•		•	•			•	•	•		•					•		•	
ZLL_ _ Loop - Maharam		15	16	16				•		•		8			•	•			•				•			
82A_ _Multiply - Maharam		15	16	16			•	•	•	•		•			•	•			•		•	•	•			
8LW_ _Pepper - Maharam		14	16	16				•		•		•			•	•	•		•	21	•		9			•
Z29_ _ Plait - Maharam		14		16	•		•	•	•	•					•						•				•	•
ZRA_ _Runner Standard - Maharam		14	18	•			•	•	•	•					•								•		7	
Z31_ _ Sequence - Maharam		14	•	•			•	•	•	•		•			•			•			•		•		•	
Z33_ _ Strum - Maharam [N]				16											•						•		•		7	
Price Category G																										
ZBU_ _ Bushel by Lisa Scull - Maharam		15	16	16				•		•	•	•			•	•			•			•				
8GI_ _ Chassis - Maharam		15	16	16				•		•	•	•			•	•	•		•			•	•		•	
ZC2_ _ Compound - Maharam [N]			16	16			•	•	•	•		8			•	•				•		•	•		7	
ZEM_ _Emboss - Maharam [N]		15		16											•								•		7	
ZF1_ _ Fold - Maharam [N]		15	16	16											•								•		7	
8AR_ _ Gild - Maharam				16				•	•	•	•				•		•		•	21	•	•	•			
ZPR_ _ Pare - Maharam		14	18	16				•		•		8			•	•			•	•	•		•		7	
ZP1_ _ Pick Crypton - Maharam		14	16	•			•	•		•		•			•	•							•		7	
82N_ _Quay - Maharam		14	16	16			•	•	•	•	•	•			•	•	•		•	20	•		•			
ZRF_ _ Runner - Maharam		14	16	16											•			•					•		•	
ZSN_ _Sheen - Maharam		14	18	•			•	•		•		•			•								•		7	
ZT4_ _ Ticker - Maharam		14	•	•			•	•	•	•	•	•		•	•			•							7	•
8DW_ _Waver - Maharam		14	16	16			•	•	•	•	•	•			•	•	•		•			•	•			
Price Category H																										
ZT_ _ Circles - Maharam		14	16	16											•										•	
ZS_ _ Crosspatch - Maharam		14		•											•			•							•	
ZK_ _ Dot Pattern - Maharam		14	•	•	•	•		•		•		•			•			•					•		•	
ZQF_ _Offset - Maharam		14	16	•								•			•			•							•	
ZP3_ _ Pocket - Maharam		14		•				•		•		•			•	•		•			•				•	
ZL_ _ Small Dot Pattern - Maharam		14	•	•	•	•		•		•		•			•			•					•		•	
Price Category I																										
7CW_ _Cursive - Maharam		14	16	16			•	•	•	•		8			•	•	•	•	•		•		•		•	
ZSY_ _ Study - Maharam																		•					•			
ZT2_ _ Teatro - Maharam			•	•				•		•															7	

continued on next page

Maharam®
Application Chart — Seating *continued*

• *Available*

A *Maharam textiles are on assigned lead times.*

[N] *Non-woven textile.*

See below for exception notes.

	Mirra® Chairs/Stools	Celle® Chairs	Sayl® Work Chairs/Stools	Sayl Side Chairs	Setu® Chairs/Stools	Setu Lounge Chair/Ottoman	Verus® Work Chairs/Stools Back	Verus Work Chairs/Stools Seat	Verus Side Chairs Back	Verus Side Chairs Seat	Verus Plus Chairs	Aside® Chairs	Caper® Chairs/Stools	Keyn Chair Group Back	Keyn Chair Group Seat	Lino® Chairs Seat	Locale® Bench Cushions	OE1 Storage Trolley Cushion Top	Public Office Landscape® Seat	Plex® Lounge Furniture	Swoop™ Lounge Seating - Fully Upholstered	Swoop Lounge Seating - Plywood	Valor™ Seating	Nemschoff® Whisk™ Chairs	Cushion Tops	Workspaces
Price Category J-K																										
No fabrics available at this time.																										
Price Category L																										
ZMK_ _ Minicheck - Maharam		14	•	•				•	•	•		•			•	•							•		7	
Price Category M																										
ZF2_ _ Fruit - Maharam		14		16								•													7	
Price Category N-Z																										
No fabrics available at this time.																										

7 *Available on 1" Cushion Tops only.*
8 *Only available on the Aside nonupholstered outer back option (PB).*
9 *Available on Valor upholstered seat.*
14 *Available on Celle UC (upholstered seat) and Celle UF (upholstered seat) chairs.*
15 *Available only on Celle HC (upholstered seat with protective edge) and Celle HF (upholstered seat) chairs.*
16 *Available on Sayl Chair seat.*
18 *Available on Sayl Chair seat and upholstered mid-back.*
20 *Not available on Plex Club Chair with Headrest.*
21 *Available on Plex seat and on Ottoman.*
26 *Available in select colors. Refer to "Maharam Textile Colors - Seating" for color offering.*

Maharam® Colors — Seating

Price Category 1

No fabrics available at this time.

Price Category 2

Metaphor – Maharam

54” wide
100% polyester
Acrylic backing

ZMA01/466553-001	Afterfeather
ZMA02/466553-002	Moonflower
ZMA03/466553-003	Handcraft
ZMA04/466553-004	Crossroad
ZMA05/466553-005	Chondrite
ZMA06/466553-006	Detective
ZMA07/466553-007	Steamship
ZMA08/466553-008	Electricity
ZMA09/466553-009	Takeoff
ZMA10/466553-010	Parachute
ZMA11/466553-011	Blueshift
ZMA12/466553-012	Dockyard
ZMA13/466553-013	Bathe
ZMA14/466553-014	Icebound
ZMA15/466553-015	Thermosphere
ZMA16/466553-016	Aboard
ZMA17/466553-017	Agateware
ZMA18/466553-018	Homeland
ZMA19/466553-019	Rockfall
ZMA20/466553-020	Undergrowth
ZMA21/466553-021	Gremolata
ZMA22/466553-022	Patina
ZMA23/466553-023	Sylvan
ZMA24/466553-024	Outfield
ZMA25/466553-025	Windbreak
ZMA26/466553-026	Saguaro
ZMA27/466553-027	Barnwood
ZMA28/466553-028	Cookshop
ZMA29/466553-029	Amandine
ZMA30/466553-030	Bodhran
ZMA31/466553-031	Centerstage
ZMA32/466553-032	Focaccia
ZMA33/466553-033	Bumblebee
ZMA34/466553-034	Microbrew
ZMA35/466553-035	Sauna
ZMA36/466553-036	Gazebo
ZMA37/466553-037	Pirouette
ZMA38/466553-038	Heartbeat
ZMA39/466553-039	Shino
ZMA40/466553-040	Sunrise
ZMA41/466553-041	Florist

Metaphor *continued*

ZMA42/466553-042	Beadwork
ZMA43/466553-043	Framboise
ZMA44/466553-044	Wisteria
ZMA45/466553-045	Warrior

Muse – Maharam

54” wide
100% post-consumer recycled polyester

8I101/466487-001	Crescendo
8I102/466487-002	Resonate
8I103/466487-003	Runway
8I104/466487-004	Ascend
8I105/466487-005	Veil *
8I106/466487-006	Refresh *
8I107/466487-007	Clear *
8I108/466487-008	Fantasy
8I109/466487-009	Miso
8I110/466487-010	Compass
8I111/466487-011	Bergamot *
8I112/466487-012	Grasshopper
8I113/466487-013	Goal
8I114/466487-014	Mistletoe
8I115/466487-015	Seaglass *
8I116/466487-016	Frigid
8I117/466487-017	Riverbend
8I118/466487-018	Noble
8I119/466487-019	Pulsar
8I120/466487-020	Velella
8I121/466487-021	Sailboat
8I122/466487-022	Sparse
8I123/466487-023	Vase
8I124/466487-024	Haven
8I125/466487-025	Mead
8I126/466487-026	Neat
8I127/466487-027	Jovial
8I128/466487-028	Theater
8I129/466487-029	Poinsettia
8I130/466487-030	Celebrate
8I131/466487-031	Spectacle

* Colors not available on Valor Seating.

Price Category 3

Meld – Maharam

54” wide
68% post-consumer recycled polyester
32% polyester
PFOA-Free stain resistant

ZM201/466387-201	Vast
ZM202/466387-202	Panda **
ZM203/466387-203	Skyline *
ZM204/466387-204	Knight **
ZM205/466387-205	Quill **
ZM206/466387-206	Pipe
ZM207/466387-207	Grate *
ZM208/466387-208	Gloss
ZM209/466387-209	Bulb
ZM210/466387-210	Bride
ZM211/466387-211	Stark
ZM212/466387-212	Seashell
ZM213/466387-213	Antler
ZM214/466387-214	Crater *
ZM215/466387-215	Perennial
ZM216/466387-216	Mulberry
ZM217/466387-217	Fuchsia *
ZM218/466387-218	Amethyst *
ZM219/466387-219	Merlot
ZM220/466387-220	Magma *
ZM221/466387-221	Rooster
ZM222/466387-222	Heat *
ZM223/466387-223	Clementine
ZM224/466387-224	Fox
ZM225/466387-225	Kiss *
ZM226/466387-226	Bare
ZM227/466387-227	Blonde
ZM228/466387-228	Mimosa
ZM229/466387-229	Comet *
ZM230/466387-230	Honeydew
ZM231/466387-231	Wild *
ZM232/466387-232	Vine
ZM233/466387-233	Seed
ZM234/466387-234	Kale *

* Colors available on 20-day lead time.
** Colors available on 10-day lead time.

Price category 3 continued on next page

- Maharam textiles are on assigned lead times A unless otherwise noted.
- Fabric numbers are listed as Herman Miller fabric number/Maharam fabric number.

Price Category 3
continued

Meld *continued*	
ZM235/466387-235	Waterfall *
ZM236/466387-236	Nordic *
ZM237/466387-237	Reef *
ZM238/466387-238	Wave
ZM239/466387-239	Isle **
ZM240/466387-240	Creek
ZM241/466387-241	Mariner *
ZM242/466387-242	Globe
ZM243/466387-243	Spa

* Colors available on 20-day lead time.
** Colors available on 10-day lead time.

Price Category 4

Lariat – Maharam	
54” wide	
100% vinyl	
ZLR01/440401-001	001
ZLR02/440401-002	002
ZLR03/440401-003	003
ZLR04/440401-004	004
ZLR06/440401-006	006
ZLR07/440401-007	007
ZLR08/440401-008	008
ZLR10/440401-010	010
ZLR11/440401-011	011
ZLR12/440401-012	012
ZLR13/440401-013	013
ZLR14/440401-014	014
ZLR15/440401-015	015
ZLR16/440401-016	016
ZLR18/440401-018	018
ZLR20/440401-020	020
ZLR21/440401-021	021
ZLR23/440401-023	023
ZLR24/440401-024	024
ZLR25/440401-025	025
ZLR26/440401-026	026
ZLR27/440401-027	027
ZLR28/440401-028	028
ZLR29/440401-029	029
ZLR30/440401-030	030
ZLR31/440401-031	031
ZLR32/440401-032	032
ZLR33/440401-033	033
ZLR34/440401-034	034
ZLR35/440401-035	035
ZLR36/440401-036	036
ZLR37/440401-037	037
ZLR38/440401-038	038

Price Category 5

Nico - Maharam	
54” wide	
63% wool	
21% polyester	
16% solution-dyed nylon	
ZNC01/466564-001	Alcazar
ZNC02/466564-002	Ironclad
ZNC03/466564-003	Tune
ZNC04/466564-004	Bridegroom
ZNC05/466564-005	Diode
ZNC06/466564-006	Jest
ZNC07/466564-007	Sanctuary
ZNC08/466564-008	Aquarius
ZNC09/466564-009	Houseboat
ZNC10/466564-010	Olympian
ZNC11/466564-011	Tennis
ZNC12/466564-012	Dressage
ZNC13/466564-013	Zing
ZNC14/466564-014	Bitterroot
ZNC15/466564-015	Gemini
ZNC16/466564-016	Posh
ZNC17/466564-017	Sizzle
ZNC18/466564-018	Cheerful
ZNC19/466564-019	Watermelon
ZNC20/466564-020	Toucan
ZNC21/466564-021	Rosin
ZNC22/466564-022	Jousting
ZNC23/466564-023	Jojoba
ZNC24/466564-024	Dromedary
ZNC25/466564-025	Toasty
ZNC26/466564-026	Casaba
ZNC27/466564-027	Greenhouse
ZNC28/466564-028	Sibyl
ZNC29/466564-029	Spearmint
ZNC30/466564-030	Pothos
ZNC31/466564-031	Calathea
ZNC32/466564-032	Landscape
ZNC33/466564-033	Espalier
ZNC34/466564-034	Gecko
ZNC35/466564-035	Meditation

Price Category 6

No fabrics available at this time.

- Maharam textiles are on assigned lead times A unless otherwise noted.
- Fabric numbers are listed as Herman Miller fabric number/Maharam fabric number.

Maharam® Colors — Seating

continued

Price Category 7

Beck – Maharam	
55” wide	
78% wool	
22% nylon	
ZB301/466571-001	Overshadow
ZB302/466571-002	Molecule
ZB303/466571-003	Zeitgeist
ZB304/466571-004	Blacksmith
ZB305/466571-005	Cornerstone
ZB306/466571-006	Chainmail
ZB307/466571-007	Buckram
ZB308/466571-008	Callisto
ZB309/466571-009	Interlude
ZB310/466571-010	Letterpress
ZB311/466571-011	Memoir
ZB312/466571-012	Litmus
ZB313/466571-013	Stoic
ZB314/466571-014	Inkpad
ZB315/466571-015	Praxis
ZB316/466571-016	Astute
ZB317/466571-017	Percolate
ZB318/466571-018	Halocline
ZB319/466571-019	Semblance
ZB320/466571-020	Loch
ZB321/466571-021	Lido
ZB322/466571-022	Underwater
ZB323/466571-023	Tetrapod
ZB324/466571-024	Nymph
ZB325/466571-025	Appalachian
ZB326/466571-026	Menthol
ZB327/466571-027	Woodruff
ZB328/466571-028	Malachite
ZB329/466571-029	Botanist
ZB330/466571-030	Woodlet
ZB331/466571-031	Katydid
ZB332/466571-032	Exuberant
ZB333/466571-033	Retrospect

Beck *continued*	
ZB334/466571-034	Lambic
ZB335/466571-035	Argil
ZB336/466571-036	Brushstroke
ZB337/466571-037	Candescent
ZB338/466571-038	Reedbuck
ZB339/466571-039	Clayware
ZB340/466571-040	Curio
ZB341/466571-041	Whimsy
ZB342/466571-042	Effervescent
ZB343/466571-043	Lingonberry
ZB344/466571-044	Resplendent
ZB345/466571-045	Hollyhock
ZB346/466571-046	Filigree
ZB347/466571-047	Plutonic
ZB348/466571-048	Foundry
ZB349/466571-049	Patisserie

Price Category 8

Luce - Maharam	
59” wide	
75% post-consumer recycled wool	
20% polyester	
5% nylon	
ZLU01/466566-001	Brioche
ZLU02/466566-002	Blanched
ZLU03/466566-003	Relic
ZLU04/466566-004	Sinter
ZLU05/466566-005	Scoria
ZLU06/466566-006	Austere
ZLU07/466566-007	Pigment
ZLU08/466566-008	Alkali
ZLU09/466566-009	Tidal
ZLU10/466566-010	Imbue
ZLU11/466566-011	Reservoir
ZLU12/466566-012	Brine
ZLU13/466566-013	Undertone
ZLU14/466566-014	Prelude
ZLU15/466566-015	Submerge
ZLU16/466566-016	Cypress
ZLU17/466566-017	Awash
ZLU18/466566-018	Adriatic
ZLU19/466566-019	Province
ZLU20/466566-020	Virescent
ZLU21/466566-021	Nettle
ZLU22/466566-022	Agrarian
ZLU23/466566-023	Serpentine
ZLU24/466566-024	Laurel
ZLU25/466566-025	Clarion
ZLU26/466566-026	Gooseberry
ZLU27/466566-027	Swelter
ZLU28/466566-028	Etruscan
ZLU29/466566-029	Coulis
ZLU30/466566-030	Rubescent
ZLU31/466566-031	Akoya
ZLU32/466566-032	Radiant
ZLU33/466566-033	Regent
ZLU34/466566-034	Spectral
ZLU35/466566-035	Thistle

Price Category 9

Campana – Maharam	
59” wide	
85% wool	
15% nylon	
ZC001/466571-001	Viverine
ZC002/466571-002	Lithograph
ZC003/466571-003	Moonscape
ZC004/466571-004	Brevity
ZC005/466571-005	Linear
ZC006/466571-006	Hinterland
ZC007/466571-007	Mural
ZC008/466571-008	Sloe
ZC009/466571-009	Interstellar
ZC010/466571-010	Mythology
ZC011/466571-011	Scintillate
ZC012/466571-012	Succession
ZC013/466571-013	Visceral
ZC014/466571-014	Hemisphere
ZC015/466571-015	Troposhpere
ZC016/466571-016	Skye
ZC017/466571-017	Seaward
ZC018/466571-018	Nemorous
ZC019/466571-019	Allegory
ZC020/466571-020	Olivine
ZC021/466571-021	Reptilian
ZC022/466571-022	Basil
ZC023/466571-023	Fanleaf
ZC024/466571-024	Beachgrass
ZC025/466571-025	Hayfield
ZC026/466571-026	Freesia
ZC027/466571-027	Rhodium
ZC028/466571-028	Undercoat
ZC029/466571-029	Airbrush
ZC030/466571-030	Shellfish
ZC031/466571-031	Mojave
ZC032/466571-032	Renaissance
ZC033/466571-033	Decoupage
ZC034/466571-034	Outback
ZC035/466571-035	Millipede

Price category 9 continued on next page

- Maharam textiles are on assigned lead times A unless otherwise noted.
- Fabric numbers are listed as Herman Miller fabric number/Maharam fabric number.

Price Category 9
continued

Gemma – Maharam	
55” wide	
85% wool	
15% nylon	
ZGE01/466568-001	Crinoline
ZGE02/466568-002	Angelic
ZGE03/466568-003	Savory
ZGE04/466568-004	Honeycomb
ZGE05/466568-005	Gilded
ZGE06/466568-006	Paddleboat
ZGE07/466568-007	Stagecoach
ZGE08/466568-008	Waterbuck
ZGE09/466568-009	Earnest
ZGE10/466568-010	Auric
ZGE11/466568-011	Carmine
ZGE12/466568-012	Serape
ZGE13/466568-013	Ferric
ZGE14/466568-014	Canyon
ZGE15/466568-015	Alembic
ZGE16/466568-016	Patio
ZGE17/466568-017	Sorrel
ZGE18/466568-018	Root
ZGE19/466568-019	Mansion
ZGE20/466568-020	Buff
ZGE21/466568-021	Starch
ZGE22/466568-022	Dawn
ZGE23/466568-023	Countryside
ZGE24/466568-024	Dewy
ZGE25/466568-025	Reliquary
ZGE26/466568-026	Deluge
ZGE27/466568-027	Overlay
ZGE28/466568-028	Electron
ZGE29/466568-029	Sheath
ZGE30/466568-030	Quietude
ZGE31/466568-031	Jargon
ZGE32/466568-032	Powder
ZGE33/466568-033	Tide
ZGE34/466568-034	Outwash
ZGE35/466568-035	Enamored
ZGE36/466568-036	Smitten
ZGE37/466568-037	Revere
ZGE38/466568-038	Mangosteen
ZGE39/466568-039	Allium
ZGE40/466568-040	Immense
ZGE41/466568-041	Chamber

Gemma *continued*	
ZGE42/466568-042	Cosmos
ZGE43/466568-043	Inkling
ZGE44/466568-044	Rainwater
ZGE45/466568-045	Shade
ZGE46/466568-046	Pendant
ZGE47/466568-047	Axial
ZGE48/466568-048	Fervent
ZGE49/466568-049	Legacy
ZGE50/466568-050	Caliber
ZGE51/466568-051	Temple
ZGE52/466568-052	Evenfall

Jasper - Maharam	
53” wide	
55% wool	
27% solution-dyed nylon	
18% cotton	
ZJA01/466563-001	Thrill
ZJA02/466563-002	Anise
ZJA03/466563-003	Grapefruit
ZJA04/466563-004	Lifeguard
ZJA05/466563-005	Heartfelt
ZJA06/466563-006	Corsage
ZJA07/466563-007	Earthenware
ZJA08/466563-008	Bear
ZJA09/466563-009	Firelight
ZJA10/466563-010	Dreamcatcher
ZJA11/466563-011	Bobcat
ZJA12/466563-012	Glacial
ZJA13/466563-013	Vaporize
ZJA14/466563-014	Trapdoor
ZJA15/466563-015	Halcyon
ZJA16/466563-016	Observatory
ZJA17/466563-017	Steamboat
ZJA18/466563-018	Aquathlon
ZJA19/466563-019	Cloudless
ZJA20/466563-020	Briny
ZJA21/466563-021	Magical
ZJA22/466563-022	Picnic
ZJA23/466563-023	Herbage
ZJA24/466563-024	Pasture
ZJA25/466563-025	Courtyard
ZJA26/466563-026	Leapfrog

Price Category 10

Gemma Multi – Maharam	
55” wide	
85% wool	
15% nylon	
ZGF01/466569-001	Andromeda
ZGF02/466569-002	Dappled
ZGF03/466569-003	Lyra
ZGF04/466569-004	Flaunt
ZGF05/466569-005	Celluloid
ZGF06/466569-006	Hydrozoa
ZGF07/466569-007	Firefly
ZGF08/466569-008	Pisces
ZGF09/466569-009	Strath
ZGF10/466569-010	Erosion
ZGF11/466569-011	Cabaret
ZGF12/466569-012	Candytuft
ZGF13/466569-013	Juice
ZGF14/466569-014	Fairground
ZGF15/466569-015	Copperplate
ZGF16/466569-016	Sunbird
ZGF17/466569-017	Cinematic
ZGF18/466569-018	Clairvoyant
ZGF19/466569-019	Crocus
ZGF20/466569-020	Memoir
ZGF21/466569-021	Roulette
ZGF22/466569-022	Voltaic
ZGF23/466569-023	Compote
ZGF24/466569-024	Lambent
ZGF25/466569-025	Twister
ZGF26/466569-026	Chronicle
ZGF27/466569-027	Sidereal
ZGF28/466569-028	Tanzanite
ZGF29/466569-029	Crystalize
ZGF30/466569-030	Chromium
ZGF31/466569-031	Pallium
ZGF32/466569-032	Spectre
ZGF33/466569-033	Courgette
ZGF34/466569-034	Viper
ZGF35/466569-035	Sunlit
ZGF36/466569-036	Heavenly
ZGF37/466569-037	Vernal
ZGF38/466569-038	Cress
ZGF39/466569-039	Limn
ZGF40/466569-040	Horseradish

Gemma Multi *continued*	
ZGF41/466569-041	Shandy
ZGF42/466569-042	Granary
ZGF43/466569-043	Percolate
ZGF44/466569-044	Motor
ZGF45/466569-045	Unicorn
ZGF46/466569-046	Lobster
ZGF47/466569-047	Rhododendron
ZGF48/466569-048	Taffy
ZGF49/466569-049	Rishi
ZGF50/466569-050	Backcountry
ZGF51/466569-051	Buckthorn
ZGF52/466569-052	Coniferous
ZGF53/466569-053	Delphic
ZGF54/466569-054	Hieroglyph
ZGF55/466569-055	Eiderdown
ZGF56/466569-056	Sandbar
ZGF57/466569-057	Tanager

Gemma Multi Reverse – Maharam	
55” wide	
85% wool	
15% nylon	
ZGF58/466569-101	Andromeda Reverse
ZGF59/466569-102	Dappled Reverse
ZGF60/466569-103	Lyra Reverse
ZGF61/466569-104	Flaunt Reverse
ZGF62/466569-105	Celluloid Reverse
ZGF63/466569-106	Hydrozoa Reverse
ZGF64/466569-107	Firefly Reverse
ZGF65/466569-108	Pisces Reverse
ZGF66/466569-109	Strath Reverse
ZGF67/466569-110	Erosion Reverse

Price category 10 continued on next page

- Maharam textiles are on assigned lead times A unless otherwise noted.
- Fabric numbers are listed as Herman Miller fabric number/Maharam fabric number.

Price Category 10
continued

Gemma Multi Reverse *continued*	
ZGF68/466569-111	Cabaret Reverse
ZGF69/466569-112	Candytuft Reverse
ZGF70/466569-113	Juice Reverse
ZGF71/466569-114	Fairground Reverse
ZGF72/466569-115	Copperplate Reverse
ZGF73/466569-116	Sunbird Reverse
ZGF74/466569-117	Cinematic Reverse
ZGF75/466569-118	Clairvoyant Reverse
ZGF76/466569-119	Crocus Reverse
ZGF77/466569-120	Memoir Reverse
ZGF78/466569-121	Roulette Reverse
ZGF79/466569-122	Voltaic Reverse
ZGF80/466569-123	Compote Reverse
ZGF81/466569-124	Lambent Reverse
ZGF82/466569-125	Twister Reverse
ZGF83/466569-126	Chronicle Reverse
ZGF84/466569-127	Sidereal Reverse
ZGF85/466569-128	Tanzanite Reverse
ZGF86/466569-129	Crystalize Reverse
ZGF87/466569-130	Chromium Reverse
ZGF88/466569-131	Pallium Reverse
ZGF89/466569-132	Spectre Reverse

Gemma Multi Reverse *continued*	
ZGF90/466569-133	Courgette Reverse
ZGF91/466569-134	Viper Reverse
ZGF92/466569-135	Sunlit Reverse
ZGF93/466569-136	Heavenly Reverse
ZGF94/466569-137	Vernal Reverse
ZGF95/466569-138	Cress Reverse
ZGF96/466569-139	Limn Reverse
ZGF97/466569-140	Horseradish Reverse
ZGF98/466569-141	Shandy Reverse
ZGF99/466569-142	Granary Reverse
ZGFA0/466569-143	Percolate Reverse
ZGFA1/466569-144	Motor Reverse
ZGFA2/466569-145	Unicorn Reverse
ZGFA3/466569-146	Lobster Reverse
ZGFA4/466569-147	Rhododendron Reverse
ZGFA5/466569-148	Taffy Reverse
ZGFA6/466569-149	Rishi Reverse
ZGFA7/466569-150	Backcountry Reverse
ZGFA8/466569-151	Buckthorn Reverse
ZGFA9/466569-152	Coniferous Reverse
ZGFB0/466569-153	Delphic Reverse
ZGFB1/466569-154	Hieroglyph Reverse

Gemma Multi Reverse *continued*	
ZGFB2/466569-155	Eiderdown Reverse
ZGFB3/466569-157	Tanager Reverse

Petra - Maharam	
55” wide	
70% wool	
19% linen	
11% nylon	
ZP401/466580-001	Hieroglyph
ZP402/466580-002	Interior
ZP403/466580-003	Samovar
ZP404/466580-004	Calcite
ZP405/466580-005	Silversmith
ZP406/466580-006	Rivet
ZP407/466580-007	Carpolite
ZP408/466580-008	Bonbon
ZP409/466580-009	Dreamy
ZP410/466580-010	Bejewel
ZP411/466580-011	Sashimi
ZP412/466580-012	Spirula
ZP413/466580-013	Chalet
ZP414/466580-014	Reindeer
ZP415/466580-015	Nostalgia
ZP416/466580-016	Trove
ZP417/466580-017	Narcissus
ZP418/466580-018	Yurt
ZP419/466580-019	Congee
ZP420/466580-020	Genepy
ZP421/466580-021	Herbaceous
ZP422/466580-022	Paddock
ZP423/466580-023	Precious
ZP424/466580-024	Biome
ZP425/466580-025	Tinted
ZP426/466580-026	Pelagic
ZP427/466580-027	Bluebill
ZP428/466580-028	Chicory
ZP429/466580-029	Eaglet
ZP430/466580-030	Permafrost
ZP431/466580-031	Atlantic
ZP432/466580-032	Airstream
ZP433/466580-033	Debonair

Price Category A

No fabrics available at this time.

- Maharam textiles are on assigned lead times A unless otherwise noted.
- Fabric numbers are listed as Herman Miller fabric number/Maharam fabric number.

Price Category B

Medium – Maharam	
54” wide	
100% polyester	
VM01/463490-001	Raven
VM02/463490-002	Smoke
VM03/463490-003	Alloy
VM04/463490-004	Flax
VM07/463490-007	Espresso
VM08/463490-008	Pecan
VM12/463490-012	Pumpkin
VM14/463490-014	Laser
VM16/463490-016	Port
VM22/463490-022	Marina
VM29/463490-029	Pistachio
VM32/463490-032	Prospect
VM36/463490-036	Delight
VM39/463490-039	Nautical
VM40/463490-040	Pool
VM44/463490-044	Washed
VM45/463490-045	Sculpture
VM46/463490-046	Thatched
VM47/463490-047	Hike
VM48/463490-048	Tangle
VM49/463490-049	Pacific
VM50/463490-050	Cosmic
VM51/463490-051	Cascade
VM52/463490-052	Blackberry
VM53/463490-053	Nasturtium

Messenger – Maharam	
54” wide	
78% recycled polyester	
15% polyester, 7% nylon	
TI07/458640-007	Shadow
TI08/458640-008	Bayou *
TI24/458640-024	Poppy
TI25/458640-025	Mao
TI29/458640-029	Onyx *
TI31/458640-031	Cloud *
TI38/458640-038	Depth *
TI40/458640-040	Nile *

Messenger *continued*	
TI41/458640-041	Azure *
TI45/458640-045	Cactus *
TI46/458640-046	Ice *
TI48/458640-048	Neon
TI50/458640-050	Hydrangea
TI53/458640-053	Tangelo
TI54/458640-054	Lumine *
TI58/458640-058	Snow **
TI60/458640-060	Peridot
TI61/458640-061	Capri *
TI62/458640-062	Ultramarine
TI63/458640-063	Squall
TI66/458640-066	Cassis
TI67/458640-067	Aster
TI69/458640-069	Cherry
TI70/458640-070	Vibrant
TI71/458640-071	Satsuma *
TI72/458640-072	Maize
TI76/458640-076	Fossil
TI77/458640-077	Ash
TI78/458640-078	Tusk
TI79/458640-079	Oyster
TI81/458640-081	Husk
TI84/458640-084	Robust
TI85/458640-085	Beyond
TI86/458640-086	Voyage *
TI87/458640-087	Everglade
TI89/458640-089	Blanch **
TI90/458640-090	Longspur
TI91/458640-091	Vireo
TI92/458640-092	Dipper
TI93/458640-093	Gale
TI94/458640-094	Hunter
TI95/458640-095	Lime
TI96/458640-096	Apple
TI97/458640-097	Krill
TI98/458640-098	Catalyst

* Colors available on 20-day lead time.

** Colors not available on Valor Seating.

Price Category C

Manner - Maharam	
54” wide	
100% recycled polyester	
Z2701/466177-001	Magic
Z2702/466177-002	Carob
Z2703/466177-003	Porpoise
Z2704/466177-004	Flint
Z2705/466177-005	Hush
Z2706/466177-006	Nuance
Z2711/466177-011	Ember
Z2712/466177-012	Wagon
Z2713/466177-013	Ablaze
Z2714/466177-014	Peel
Z2716/466177-016	Butterscotch
Z2717/466177-017	Harvest
Z2720/466177-020	Parakeet
Z2722/466177-022	Aquatic
Z2723/466177-023	Cottage
Z2724/466177-024	Dahlia
Z2725/466177-025	Vivid
Z2726/466177-026	Basin
Z2727/466177-027	Schooner
Z2728/466177-028	Slope
Z2729/466177-029	Silverpoint
Z2730/466177-030	Lattice
Z2731/466177-031	Smoky
Z2732/466177-032	Magnetic
Z2733/466177-033	Woad
Z2734/466177-034	Resolute
Z2735/466177-035	Cruise
Z2736/466177-036	Atmospheric
Z2737/466177-037	Cloudburst
Z2738/466177-038	Tidewater
Z2739/466177-039	Firth
Z2740/466177-040	Oceanside
Z2741/466177-041	Grandeur
Z2742/466177-042	Comfort
Z2743/466177-043	Dill
Z2744/466177-044	Poplar
Z2745/466177-045	Citronella
Z2746/466177-046	Passerine

Manner *continued*	
Z2747/466177-047	Southwest
Z2748/466177-048	Roseate
Z2749/466177-049	Charisma
Z2750/466177-050	Siltstone
Z2751/466177-051	Kimono
Z2752/466177-052	Valiant
Z2753/466177-053	Baroness

Merit - Maharam	
54” wide	
76% post-industrial recycled polyester	
24% polyester	
PFOA-Free stain resistant	
88Z01/466444-001	Trickle
88Z02/466444-002	Beluga
88Z03/466444-003	Gunmetal
88Z04/466444-004	Blackout
88Z05/466444-005	Superior
88Z06/466444-006	Ocean
88Z07/466444-007	Highborn
88Z08/466444-008	Immersed
88Z09/466444-009	Rainfall
88Z10/466444-010	Blizzard
88Z11/466444-011	Poolside
88Z12/466444-012	Steel
88Z13/466444-013	Zircon
88Z14/466444-014	Ripple
88Z15/466444-015	Aegean
88Z16/466444-016	Armada
88Z17/466444-017	Hedera
88Z18/466444-018	Rainforest
88Z19/466444-019	Gator
88Z20/466444-020	Vineyard
88Z21/466444-021	Pine
88Z22/466444-022	Kiwi
88Z23/466444-023	Kookaburra
88Z24/466444-024	Bellini
88Z25/466444-025	Sunflower
88Z26/466444-026	Sandstorm

Price category C continued on next page

- Maharam textiles are on assigned lead times A unless otherwise noted.
- Fabric numbers are listed as Herman Miller fabric number/Maharam fabric number.

Price Category C
continued

Merit *continued*	
88Z27/466444-027	Mudder
88Z28/466444-028	Lynx
88Z29/466444-029	Farro
88Z30/466444-030	Manila
88Z31/466444-031	Starfish
88Z32/466444-032	Brass
88Z33/466444-033	Arrow
88Z34/466444-034	Gelato
88Z35/466444-035	Nectarine
88Z36/466444-036	Macaron
88Z37/466444-037	Alert
88Z38/466444-038	Goji
88Z39/466444-039	Cabernet
88Z40/466444-040	Eggplant
88Z41/466444-041	Hawk
88Z42/466444-042	Stag
88Z43/466444-043	Overcast

Metric – Maharam	
54” wide	
51% recycled polyester	
49% polyester	
Z302/466014-002	Fog
Z303/466014-003	Fleece
Z312/466014-012	Cardinal
Z313/466014-013	Lava
Z318/466014-018	Pollen
Z320/466014-020	Alligator
Z323/466014-023	Tar
Z324/466014-024	Anchor
Z326/466014-026	Admiral
Z327/466014-027	Seaport
Z328/466014-028	Scuba
Z329/466014-029	Skate
Z330/466014-030	Hopscotch
Z331/466014-031	Film
Z332/466014-032	Whale
Z333/466014-033	Downpour
Z334/466014-034	Midday
Z335/466014-035	Talisman

Metric *continued*	
Z336/466014-036	Hedgerow
Z337/466014-037	Snorkel
Z338/466014-038	Highway
Z339/466014-039	Canary
Z340/466014-040	Sunny
Z341/466014-041	Aztec
Z342/466014-042	Fruit
Z343/466014-043	Galah
Z344/466014-044	Kiln
Z345/466014-045	Moth

Milestone – Maharam	
54” wide	
78% post-industrial recycled polyester	
15% polyester	
7% nylon	
ZML22/403901-022	Pewter
ZML25/403901-025	Charcoal
ZML26/403901-026	Ebony
ZML31/403901-031	Ground
ZML46/403901-046	Tortoise
ZML47/403901-047	Rush
ZML54/403901-054	Linger
ZML55/403901-055	Embrace
ZML57/403901-057	Coffee
ZML58/403901-058	Bison
ZML61/403901-061	Tiger Lily
ZML69/403901-069	Lychee
ZML71/403901-071	Daffodil
ZML72/403901-072	Ecru
ZML78/403901-078	Spruce
ZML79/403901-079	Fountain
ZML80/403901-080	Mykonos

Murmur - Maharam	
55” wide	
100% polyester	
PFOA-Free stain resistant	
8EY01/466446-001	Gust
8EY02/466446-002	Harmonica
8EY03/466446-003	Canopy
8EY04/466446-004	Dim
8EY05/466446-005	Peppercorn
8EY06/466446-006	Cauldron
8EY07/466446-007	Conquer
8EY08/466446-008	Rapids
8EY09/466446-009	Seawater
8EY10/466446-010	Baby
8EY11/466446-011	Elderberry
8EY12/466446-012	Iceberg
8EY13/466446-013	Tallgrass
8EY14/466446-014	Underground
8EY15/466446-015	Biome
8EY16/466446-016	Cask
8EY17/466446-017	Argan
8EY18/466446-018	Sundown
8EY19/466446-019	Ignite
8EY20/466446-020	Sultry
8EY21/466446-021	Sangria

Price Category D

Bluff - Maharam	
54” wide	
100% polyurethane	
Ink-resistant protective top coat	
Polyester backing	
8I801/466489-001	Loom
8I802/466489-002	Helm
8I803/466489-003	Cruller
8I804/466489-004	Folklore
8I805/466489-005	Beguile
8I806/466489-006	Sherpa
8I807/466489-007	Teleport
8I808/466489-008	Annex
8I809/466489-009	Lorimer
8I810/466489-010	Cinema
8I811/466489-011	Zip
8I812/466489-012	Coach
8I813/466489-013	Supernova
8I814/466489-014	Pirate
8I815/466489-015	Academy
8I816/466489-016	Disco
8I817/466489-017	Equator
8I818/466489-018	Brink
8I819/466489-019	Scene
8I820/466489-020	Petrichor
8I821/466489-021	Exotic
8I822/466489-022	Fauna
8I823/466489-023	Calabash
8I824/466489-024	Fuscous
8I825/466489-025	Wildling
8I826/466489-026	Blitz
8I827/466489-027	Allspice
8I828/466489-028	Lumos
8I829/466489-029	Pilot
8I830/466489-030	Jukebox
8I831/466489-031	Dugout
8I832/466489-032	Claret
8I833/466489-033	Flamenco

Mode – Maharam	
54” wide	
80% post-consumer recycled polyester	
20% polyester	
PFOA-Free stain resistant finish	

Price category D continued on next page

- Maharam textiles are on assigned lead times A unless otherwise noted.
- Fabric numbers are listed as Herman Miller fabric number/Maharam fabric number.

Price Category D
continued

Mode *continued*	
ZMD01/466337-001	Stroll
ZMD02/466337-002	Intaglio
ZMD03/466337-003	Ominous
ZMD04/466337-004	Machine
ZMD05/466337-005	Talus
ZMD06/466337-006	Marsh
ZMD07/466337-007	Hollow
ZMD08/466337-008	Sycamore
ZMD09/466337-009	Clavicle
ZMD10/466337-010	Billygoat
ZMD11/466337-011	Spindle
ZMD12/466337-012	Lemon
ZMD13/466337-013	Oxeye
ZMD14/466337-014	Henge
ZMD15/466337-015	Goldenrod
ZMD16/466337-016	Cottontail
ZMD17/466337-017	Lioness
ZMD18/466337-018	Oriole
ZMD19/466337-019	Rust
ZMD20/466337-020	Carotene
ZMD21/466337-021	Blush
ZMD22/466337-022	Vermilion
ZMD23/466337-023	Alder
ZMD24/466337-024	Kermes
ZMD25/466337-025	Barberry
ZMD26/466337-026	Petal
ZMD27/466337-027	Valley
ZMD28/466337-028	Odyssey
ZMD29/466337-029	Ballpoint
ZMD30/466337-030	Toile
ZMD31/466337-031	Paradise
ZMD32/466337-032	Angelfish
ZMD33/466337-033	Denim
ZMD34/466337-034	Crush
ZMD35/466337-035	Jetty
ZMD36/466337-036	Saltwater
ZMD37/466337-037	Mallard
ZMD38/466337-038	Celtic
ZMD39/466337-039	Eucalyptus
ZMD40/466337-040	Bonsai
ZMD41/466337-041	Sassafras
ZMD42/466337-042	Yucca
ZMD43/466337-043	Lichen

Price Category E

Article – Maharam	
54” wide	
100% vinyl	
ZAT08/458600-008	Marina
ZAT13/458600-013	Flume
ZAT14/458600-014	Storm
ZAT15/458600-015	Toast
ZAT19/458600-019	Fleece
ZAT22/458600-022	Stone
ZAT26/458600-026	Mercury
ZAT29/458600-029	Bluegrass
ZAT31/458600-031	Truffle
ZAT32/458600-032	Gravel
ZAT33/458600-033	Value
ZAT34/458600-034	Tint
ZAT35/458600-035	Snowflake
ZAT36/458600-036	Chalice
ZAT37/458600-037	Trail
ZAT38/458600-038	Pyramid
ZAT39/458600-039	Desert
ZAT40/458600-040	Lei
ZAT41/458600-041	Rouge
ZAT42/458600-042	Karma
ZAT43/458600-043	Opal
ZAT44/458600-044	Periwinkle
ZAT45/458600-045	Vampire
ZAT46/458600-046	Surf
ZAT47/458600-047	Plumage

Dwell - Maharam	
54” wide	
68% post-industrial	
recycled polyester	
32% post-consumer	
recycled polyester	
PFOA-Free stain resistant	
Latex backing	
89601/466419-001	Sesame
89602/466419-002	Summit
89603/466419-003	Freeze
89604/466419-004	Poolside
89605/466419-005	Teal
89606/466419-006	Mojito
89607/466419-007	Lizard

Dwell *continued*	
89608/466419-008	Thunder
89609/466419-009	Foil
89611/466419-011	Firecracker

Pick - Maharam	
58” wide	
100% polyester	
with stain resistant finish	
ZP201/466224-001	001
ZP202/466224-002	002
ZP203/466224-003	003
ZP204/466224-004	004
ZP205/466224-005	005
ZP206/466224-006	006
ZP207/466224-007	007
ZP208/466224-008	008
ZP209/466224-009	009
ZP210/466224-010	010

Roster - Maharam	
54” wide	
68% post-consumer	
recycled polyester	
32% polyester	
PFOA-Free stain resistant	
Acrylic backing	
ZR201/466445-001	Jacana
ZR202/466445-002	Wythe
ZR203/466445-003	Grosgrain
ZR204/466445-004	Ceremony
ZR205/466445-005	Breton
ZR206/466445-006	Frigate

Technic - Maharam	
56” wide	
60% post-industrial recycled polyester	
40% post-consumer recycled polyester	
PFOA-Free stain resistant finish	
Acrylic backing	
ZT301/466226-001	Cumin
ZT302/466226-002	Evergreen
ZT303/466226-003	Cobalt
ZT305/466226-005	Squirrel

Price Category F

Apt – Maharam	
54” wide	
100% polyurethane/silicone	
Ink-resistant protective top coat	
Polyester backing	
82T12/466392-012	Iris
82T13/466392-013	Nocturnal
82T14/466392-014	Fluid
82T15/466392-015	Eden
82T16/466392-016	Galactic
82T17/466392-017	Shoreline
82T18/466392-018	Jade
82T19/466392-019	Garden
82T20/466392-020	Botanic
82T21/466392-021	Chartreuse
82T23/466392-023	Lyric
82T24/466392-024	Turmeric
82T25/466392-025	Bengal
82T26/466392-026	Core
82T27/466392-027	Mantle
82T28/466392-028	Sorbet
82T32/466392-032	Oak
82T33/466392-033	Castle
82T34/466392-034	Follow
82T35/466392-035	Elixir
82T36/466392-036	Charm
82T37/466392-037	Descend
82T38/466392-009	Sketch
82T39/466392-010	Glacier
82T40/466392-031	Fortress
82T41/466392-030	Lotus
82T42/466392-001	Coconut
82T43/466392-011	Cobblestone
82T44/466392-029	Bloom
82T45/466392-022	Crepe
82T46/466392-006	Hickory
82T47/466392-007	Constellation
82T48/466392-008	Labyrinth
82T49/466392-002	Vibe
82T50/466392-003	Stampede
82T51/466392-004	Lumber
82T52/466392-005	Gingerbread

Price category F continued on next page

- Maharam textiles are on assigned lead times A unless otherwise noted.
- Fabric numbers are listed as Herman Miller fabric number/Maharam fabric number.

Price Category F
continued

Brindle - Maharam	
58” wide	
100% polyester	
PFOA-free stain resistant	
Acrylic backing	
87101/466418-001	Calico
87102/466418-002	Mauve
87103/466418-003	Torch
87104/466418-004	Burnt
87105/466418-005	Barn
87106/466418-006	Pharaoh
87107/466418-007	Sandbur
87108/466418-008	Jungle
87109/466418-009	Inland
87110/466418-009	Seagrass
87111/466418-009	Watercolor
87112/466418-009	Aquarium
87113/466418-009	Drill

Coin - Maharam	
57” wide	
43% polyester	
37% post-industrial recycled polyester	
20% post-consumer recycled polyester	
PFOA-Free stain resistant finish	
Acrylic backing	
ZC801/466233-001	Nickel
ZC805/466233-005	Penny
ZC806/466233-006	Exchange
ZC807/466233-007	Lead

Conduit - Maharam	
58” wide	
100% polyester	
PFOA-free stain resistant	
Acrylic backing	
87Z01/466428-001	Space
87Z02/466428-002	Syrup
87Z03/466428-003	Nimbus
87Z04/466428-004	Greystone
87Z05/466428-005	Fawn
87Z06/466428-006	Ghost
87Z07/466428-007	Caribbean
87Z08/466428-008	Canal
87Z09/466428-009	Bonfire

Crush – Maharam	
54” wide	
85% solution-dyed nylon	
13% polyester	
2% polyolefin	
VS08/464780-008	008
VS17/464780-017	017
VS20/464780-020	020

Instill – Maharam	
54” wide	
100% polyurethane	
Ink-resistant protective top coat	
Polyester backing	
74M01/466351-001	Page
74M02/466351-002	Limestone
74M03/466351-003	Bobwhite
74M04/466351-004	Loafer
74M05/466351-005	Moor
74M06/466351-006	Barley
74M07/466351-007	Shaker
74M08/466351-008	Doe
74M09/466351-009	Ride
74M10/466351-010	Squire
74M11/466351-011	Tannin
74M12/466351-012	Vitis
74M13/466351-013	Sonar
74M14/466351-014	Quail
74M15/466351-015	Brittanic
74M16/466351-016	Narwhal
74M17/466351-017	Synth
74M18/466351-018	Stowaway
74M19/466351-019	Koala
74M20/466351-020	Dorsal
74M21/466351-021	Stealth

Keen - Maharam	
54” wide	
61% polyester	
39% polyolefin	
PFOA-Free stain resistant	
Acrylic backing	
89N01/466433-001	Gaur
89N02/466433-002	Lock
89N03/466433-003	Elk
89N04/466433-004	Oatmeal
89N05/466433-005	Lakefront
89N06/466433-006	Argent
89N07/466433-007	Coyote
89N08/466433-008	Eventide
89N09/466433-009	Canal
89N10/466433-010	Rosemary
89N11/466433-011	Herb
89N12/466433-012	Ruby
89N13/466433-013	Loganberry

Ledger – Maharam	
54” wide	
100% polyurethane	
V9G1/463770-001	001
V9G2/463770-002	002
V9G3/463770-003	003
V9G4/463770-004	004
V9GG/463770-017	017
V9GQ/463770-025	025
V9GS/463770-026	026
V9GU/463770-028	028
V9GV/463770-029	029
V9GW/463770-030	030
V9GX/463770-031	031
V9GY/463770-032	032
V9G13/463770-037	037
V9G17/463770-041	041
V9G18/463770-042	042
V9G19/463770-043	043
V9G20/463770-044	044
V9G21/463770-045	045
V9G22/463770-046	046

Loop - Maharam	
57” wide	
48% post-industrial recycled polyester	
26% polyester	
26% post-consumer recycled polyester	
PFOA-Free stain resistant	
Acrylic Backing	
ZLL01/466469-001	Opossum
ZLL02/466469-002	Foundation
ZLL03/466469-003	Naval
ZLL04/466469-004	Buoyant
ZLL05/466469-005	Mockingbird
ZLL06/466469-006	Dynasty
ZLL07/466469-007	Zori
ZLL08/466469-008	Wildfire
ZLL09/466469-009	Floral
ZLL10/466469-010	Penguin

Multiply - Maharam	
58” wide	
57% post-consumer recycled polyester	
43% post-industrial recycled polyester	
PFOA-Free stain resistant	
Acrylic Backing	
82A01/466341-001	Winter
82A02/466341-002	Encore
82A03/466341-003	Swing
82A04/466341-004	Contrast
82A05/466341-005	Sterling
82A06/466341-006	Daze
82A07/466341-007	Sway
82A08/466341-008	Sailor
82A09/466341-009	Mystique
82A10/466341-010	Deep
82A11/466341-011	Craft
82A12/466341-012	Town
82A13/466341-013	Limit
82A14/466341-014	Tamale

Price category F continued on next page

- Maharam textiles are on assigned lead times A unless otherwise noted.
- Fabric numbers are listed as Herman Miller fabric number/Maharam fabric number.

Price Category F
continued

Pepper - Maharam
58” wide
49% polyester
41% post-industrial recycled polyester
10% post-consumer recycled polyester
PFOA-Free stain resistant
Acrylic Backing

8LW01/466486-001	Dojo
8LW02/466486-002	Marengo
8LW03/466486-003	Harlequin
8LW04/466486-004	Pavlova
8LW05/466486-005	Sedona
8LW06/466486-006	Achiote
8LW07/466486-007	Essence
8LW08/466486-008	Genome
8LW09/466486-009	Myriad
8LW10/466486-010	Terrarium

Plait - Maharam
58” wide
68% recycled polyester
32% polyester

Z2901/466052-001	Cobblestone
Z2905/466052-005	Sequoia
Z2908/466052-008	Reef
Z2909/466052-009	Stormy
Z2910/466052-010	Dapper

Runner Standard - Maharam
58” wide
57% post-industrial recycled polyester
43% post-consumer recycled polyester

ZRA07/466167-007	Bluff
ZRA09/466167-009	Grove
ZRA10/466167-010	Starboard
ZRA12/466167-012	Carousel

Sequence - Maharam
54” wide
100% solution-dyed polyolefin
with silver-based antimicrobial

Z3101/466179-001	Driftwood
Z3104/466179-004	Alfresco
Z3105/466179-005	Plunge
Z3106/466179-006	Starboard
Z3107/466179-007	Veranda
Z3109/466179-009	Flare

Strum - Maharam
54” wide
100% polyurethane
with silver-based antimicrobial

Z3301/466122-001	Overcast
Z3302/466122-002	Ridge
Z3304/466122-004	Pigeon
Z3307/466122-007	Bur
Z3308/466122-008	Abalone
Z3311/466122-011	Wheat
Z3312/466122-012	Lemongrass

Price Category G

Bushel by Lisa Scull - Maharam
54” wide
45% solution-dyed nylon
45% solution-dyed post-industrial
recycled nylon
9% polyester
1% polyolefin
Acrylic backing

ZBU01/466490-001	Enchant
ZBU02/466490-002	Flurry
ZBU03/466490-003	Oxygen
ZBU04/466490-004	Vortex
ZBU05/466490-005	Loon
ZBU06/466490-006	Maverick
ZBU07/466490-007	Hadron
ZBU08/466490-008	Spirulina
ZBU09/466490-009	Environ
ZBU10/466490-010	Rotunda
ZBU11/466490-011	Caraway

Chassis by Lisa Scull - Maharam
54” wide
50% solution-dyed nylon
50% solution-dyed post-industrial
recycled nylon
PFOA-Free stain resistant
Acrylic backing

8GI01/466458-001	Locomotive
8GI02/466458-002	Owl
8GI03/466458-003	Minuet
8GI04/466458-004	Galax
8GI05/466458-005	Stratus
8GI06/466458-006	Cape
8GI07/466458-007	Cirrus
8GI08/466458-008	Inlet
8GI09/466458-009	Petrol
8GI10/466458-010	Peppermint
8GI11/466458-011	Hemic

Compound - Maharam
54” wide
100% polyurethane
silane-based antimicrobial

ZC201/466196-001	001
ZC203/466196-003	003
ZC204/466196-004	004
ZC205/466196-005	005
ZC206/466196-006	006
ZC207/466196-007	007
ZC208/466196-008	008
ZC209/466196-009	009
ZC210/466196-010	010
ZC211/466196-011	011
ZC212/466196-012	012
ZC213/466196-013	013
ZC214/466196-014	014
ZC215/466196-015	015
ZC216/466196-016	016
ZC217/466196-017	017
ZC218/466196-018	018
ZC219/466196-019	019

Emboss - Maharam
54” wide
100% polyurethane
Polyester backing

ZEM01/466281-001	Bronze
ZEM02/466281-002	Brass
ZEM03/466281-003	Gold
ZEM04/466281-004	Platinum
ZEM09/466281-009	Ultraviolet
ZEM10/466281-010	Copper
ZEM11/466281-011	Molten

Price category G continued on next page

- Maharam textiles are on assigned lead times A unless otherwise noted.
- Fabric numbers are listed as Herman Miller fabric number/Maharam fabric number.

Price Category G
continued

Fold - Maharam	
54” wide	
100% polyurethane	
Polyester backing	
ZF101/466292-001	Jet
ZF102/466292-002	Chalk
ZF103/466292-003	Smoke
ZF104/466292-004	Putty
ZF105/466292-005	Fatigue
ZF106/466292-006	Splash
ZF107/466292-007	Apple
ZF108/466292-008	Moss
ZF109/466292-009	Graphite
ZF110/466292-010	Midnight

Gild - Maharam	
54” wide	
100% non-phthalate vinyl	
Ink-resistant protective top coat	
Polyester backing	
8AR01/466432-005	Grapevine
8AR02/466432-009	Frosting
8AR03/466432-007	Smokey
8AR04/466432-003	Skylight
8AR05/466432-011	Sandstone
8AR06/466432-004	Hurricane
8AR07/466432-002	Wreath
8AR08/466432-001	Rainforest
8AR09/466432-012	Fudge
8AR10/466432-010	Lantern
8AR11/466432-006	Planet
8AR12/466432-008	Reflection

Pare – Maharam	
54” wide	
52% wool	
26% polyester	
22% nylon	
PFOA-free stain resistant finish	
ZPR01/466359-001	Polaris
ZPR02/466359-002	Mountain
ZPR03/466359-003	Mineral
ZPR04/466359-004	Fresco
ZPR06/466359-006	Wink
ZPR07/466359-007	Concord
ZPR08/466359-008	Strawberry
ZPR09/466359-009	Solar
ZPR10/466359-010	Amulet
ZPR11/466359-011	Zest
ZPR12/466359-012	Elmwood
ZPR13/466359-013	Thyme
ZPR14/466359-014	Frost
ZPR16/466359-016	Denim
ZPR17/466359-017	Blueberry

Pick Crypton - Maharam	
54” wide	
100% polyester	
Crypton finish and backing	
ZP103/466235-003	Slate
ZP105/466235-005	Pepper
ZP107/466235-007	Fresh
ZP108/466235-008	Cool
ZP109/466235-009	Ink

Quay – Maharam	
54” wide	
73% post-industrial recycled cotton	
18% polyester	
9% solution-dyed polyester	
PFOA-Free stain resistant	
82N03/466390-003	Chapelle
82N06/466390-006	Swan
82N07/466390-007	Granite
82N10/466390-010	Seafoam
82N12/466390-012	Parrot
82N13/466390-013	Persian
82N15/466390-015	Cerulean
82N17/466390-017	Cascade
82N20/466390-020	Spectrum
82N23/466390-023	Leaf
82N25/466390-025	Oxford
82N30/466390-030	Cardinal
82N32/466390-032	Abode

Runner - Maharam	
54” wide	
57% post-industrial recycled polyester	
43% post-consumer recycled polyester	
ZRF01/466108-001	Bluff
ZRF03/466108-003	Grove
ZRF04/466108-004	Starboard
ZRF05/466108-005	Plot
ZRF06/466108-006	Carousel

Sheen - Maharam	
54” wide	
100% polyurethane with silane-based antimicrobial	
ZSN02/466246-002	Silver
ZSN03/466246-003	Pewter
ZSN04/466246-004	Hearth
ZSN05/466246-005	Fern
ZSN07/466246-007	Cricket
ZSN09/466246-009	Mystic
ZSN10/466246-010	Vat
ZSN11/466246-011	Huckleberry
ZSN16/466246-016	Kumquat
ZSN17/466246-017	Cinnamon
ZSN18/466246-018	Alder

Ticker - Maharam	
54” wide	
47% polyester	
31% post-industrial recycled polyester	
22% post-consumer recycled polyester	
Crypton green finish and backing	
ZT410/466304-010	Aquarium
ZT412/466304-012	Depth

Waver - Maharam	
54” wide	
50% solution-dyed nylon	
50% solution-dyed post-industrial recycled nylon	
PFOA-Free stain resistant	
Acrylic backing	
8DW01/466459-001	Mingle
8DW02/466459-002	Numinous
8DW03/466459-003	Gale
8DW04/466459-004	Dual
8DW05/466459-005	Azure
8DW06/466459-006	Wash
8DW07/466459-007	Magpie
8DW08/466459-008	Steller
8DW09/466459-009	Peony
8DW10/466459-010	Kermes
8DW11/466459-011	Oar

- Maharam textiles are on assigned lead times A unless otherwise noted.
- Fabric numbers are listed as Herman Miller fabric number/Maharam fabric number.

Maharam® Colors — Seating

continued

Price Category H

Circles — Maharam

55” wide
70% cotton
30% polyester

ZT01/458310-001	Khaki
ZT02/458310-002	Fatigue
ZT03/458310-003	Document
ZT04/458310-004	Engine
ZT05/458310-005	Charcoal

Crosspatch — Maharam

54” wide
75% rayon
25% polyester

ZS01/458920-001	Song

Dot Pattern — Maharam

55” wide
71% cotton
29% polyester

ZK01/458300-001	Document
ZK02/458300-002	Taupe
ZK04/458300-004	Red
ZK05/458300-005	Navy

Offset – Maharam

54” wide
40% cotton
36% nylon
24% wool

ZQF01/465951-001	Passage
ZQF02/465951-002	Fieldstone
ZQF03/465951-003	Coast
ZQF04/465951-004	Esplanade
ZQF05/465951-005	Oasis
ZQF06/465951-006	Spice
ZQF07/465951-007	Bloom

Pocket - Maharam

54” wide
76% recycled polyester
24% nylon

ZP301/466243-001	001
ZP303/466243-003	003
ZP305/466243-005	005
ZP307/466243-007	007

Small Dot Pattern — Maharam

55” wide
71% cotton
29% polyester

ZL01/458320-001	Document
ZL02/458320-002	Sand
ZL03/458320-003	Khaki
ZL04/458320-004	Taupe
ZL05/458320-005	Charcoal
ZL06/458320-006	Document Reverse
ZL07/458320-007	Red
ZL08/458320-008	Yellow
ZL09/458320-009	Green

Price Category I

Cursive – Maharam

54” wide
67% solution-dyed acrylic
33% solution-dyed polyester
PFOA-Free stain resistant

7CW01/466335-001	Fast
7CW03/466335-003	Beachcomb
7CW05/466335-005	Swift
7CW07/466335-007	Inkwell
7CW08/466335-008	Rubber

Study - Maharam

54” wide
73% solution-dyed acrylic
27% solution-dyed polyester

ZSY01/466269-001	001
ZSY02/466269-002	002
ZSY03/466269-003	003
ZSY04/466269-004	004
ZSY05/466269-005	005

Teatro - Maharam

55” wide
100% polyester
Polyester/Cotton backing

ZT201/466309-001	Crumb
ZT203/466309-003	Herd
ZT206/466309-006	Heat
ZT207/466309-007	Caspian
ZT209/466309-009	Boulder
ZT210/466309-010	Elixir
ZT211/466309-011	Guard
ZT212/466309-012	Throne

Price Category J-K

No fabrics available at this time.

- Maharam textiles are on assigned lead times A unless otherwise noted.
- Fabric numbers are listed as Herman Miller fabric number/Maharam fabric number.

Maharam® Colors — Seating

continued

Price Category L

Minicheck - Maharam	
55” wide	
78% cotton	
22% polyester	
PFOA-Free stain resistant finish	
ZMK01/466268-001	Black/ White

Price Category M

Fruit - Maharam	
54” wide	
55% cotton	
32% nylon	
13% post-consumer recycled polyester	
PFOA-Free stain resistant finish	
Acrylic backing	
ZF201/466262-001	Opal
ZF202/466262-002	Lime
ZF203/466262-003	Olive
ZF204/466262-004	Sky
ZF207/466262-007	Russet

Price Category N-Z

No fabrics available at this time.

- Maharam textiles are on assigned lead times A unless otherwise noted.
- Fabric numbers are listed as Herman Miller fabric number/Maharam fabric number.

For more information about our products and services or to see a list of dealers, please visit us at HermanMiller.com or call (800) 851 1196.

© 2022 Herman Miller, Inc., Zeeland, Michigan

Distribution Rights

Working together since 1956, Herman Miller and Vitra are the authentic sources of designs by Charles and Ray Eames, Alexander Girard, and George Nelson. All the designs shown in this book are protected by law. Herman Miller has obtained all rights to make and sell these designs. Also, Herman Miller holds exclusive worldwide manufacturing and distribution rights for these products with the following exceptions:

Charles and Ray Eames, George Nelson, and Alexander Girard—Worldwide distribution rights for furniture in all areas except Europe and the Middle East. For those areas, please contact Vitra.

Isamu Noguchi—Worldwide distribution rights for the Noguchi Rudder Table. Distribution rights for the Noguchi Table in North America and Central America only. For all other areas, please contact Vitra.

Magis—Exclusive distribution rights in the US and Canada. For all other areas, please contact Magis.

® HermanMiller, , 3D Intelligent, AO, Action Office, Aeron, ArcSpan, Aside, Avall, Bubble Lamps, Canvas Office Landscape, Caper, Celle, Cosm, Co/Struc, Daisyone, Distil, Eames, Eco-Dematerialized, Embody, Envelop, Ethospace, Exclave, Fine-Tune, FlexFront, Flo, Formcoat, Formwork, Ground Cloth, Herman Miller for the Home, Herman Miller for Healthcare, Intersect, Kinemat, Layout Studio, Lifework, Limerick, Lino, Live Unframed, Living Office, Maharam, Meridian, Mirra, Motia, Nelson, Pellicle, Perspectives, Plex, PostureFit, PostureFit SL, Prospects, Public Office Landscape, Resolve, Rodney, Sayl, Setu, Tu, Ubi, Verus, Wishbone, and Y-Tower are among the registered trademarks of Herman Miller, Inc., and its owned subsidiaries.

™ 8Z Pellicle, About Face, AireWeave, Albert, Backfit, Bubbletack, Burdick Group, Butterfly Back, Cellular Suspension, Clam, Commend, Compass, Connect, DOT, Duracare, Durawrap, EnhancedAccess, Everywhere, Flex-Edge, Flute, Harmonic, Headway, Herman Miller Select, Hopsak 2, Intent, Iota, Jaw, Keyless Entry, Keyn Chair Group by Herman Miller, Latitude, Locale, Logic Mini, Logic Power Access Solutions, Live Platform, Loop, Lyris, Lyris 2, Made-to-Measure Storage, Mora, Multiscrim, Nevi, OE1 Workspace Collection, Overlay, Pari, Pixelated Support, Pronta Stacking Chairs by Herman Miller, Prospect, Renew, Sense, Soft Pad, Stackable, Stackable Storage, Striad, Swoop, Thrive, Tone, TriFlex, Twist, Vista and Wireframe are among the trademarks of Herman Miller, Inc., and its owned subsidiaries.

SM Herman Miller Options is among the service marks of Herman Miller, Inc.

AAP™ is a trademark of Extron Electronics.

Alexander Girard® is a registered trademark of The Alexander Girard Estate.

Chemsurf® is a registered trademark of Wilsonart International.

Corian® is a registered trademark of E. I. du Pont de Nemours and Company Corporation.

Crypton® is a registered trademark of Crypton, Inc.

DACRON® is a registered trademark of INVISTA S.a r.l.

Danzer® is a registered trademark of Danzer Holding AG.

Decora® is a registered trademark of Leviton Manufacturing Co., Inc.

Edelman® Leather is a registered trademark of Edelman Leather, Inc.

Extron® is a registered trademark of RGB Systems, Inc.

FENIX NTM® is a registered trademark of Arpa Industriale S.p.A.

FLEXNET™ is a trademark of Milliken & Company.

Floor Saver Glide® is a registered trademark of Carpin Manufacturing, Inc.

Forest Stewardship Council® is a registered trademark of the Forest Stewardship Council A.C. (FSC). We are FSC® certified (FSC® C102895).

FSC® is a registered trademark of the Forest Stewardship Council A.C. (FSC).

Geiger® is a registered trademark, and Bumper™, Saiba™, and Ward Bennett™ are trademarks, of Geiger International.

Hang-It-All® is a registered trademark of Lucia Eames Demetrios, d.b.a. Eames Office.

Holophane® is a registered trademark of Holophane.

Ingeo™ is a trademark of Cargill Dow LLC.

iPad® and Mac mini® are registered trademarks of Apple Inc.

Leviton® is a registered trademark of Leviton Manufacturing Co., Inc.

LifeSize® is a registered trademark of LifeSize Communications, Inc.

Logitech G® is a registered trademark of Logitech International S.A.

Magis®, Bombo®, and Me Too® are registered trademarks of Magis S.p.A.

MicrobeCare™ is a trademark of Parasol Medical LLC.

Microsoft® and Natural® Keyboard are registered trademarks of Microsoft Corporation.

Noguchi® and the Noguchi table configuration (trade dress) are registered trademarks, and Rudder Table™ is a trademark, of The Isamu Noguchi Foundation and Garden Museum.

Place Textiles® is a registered trademark of Place Textiles.

Sunbrella® is a registered trademark of Glen Raven, Inc.

SuperSeat™ is a trademark of Dahti Seating, a division of ITW.

Valor™ and Whisk™ are among the trademarks owned by Nemschoff, Inc.